DWG. NO.
78009001

CUSTOMER NAME
STANDARD MOTOR

ALLIED MOTION MODEL NO.
SEE CHART BELOW

2WK2 POWER DSUB CONNECTOR PINOUT

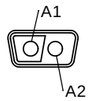

PIN	FUNCTION
A1	- POWER
A2	+ POWER
Mate: Konmek PS400N-2WK2FTB0 Sealed Mate: Konmek PS400N-2WK2FTB0/HW1-1	

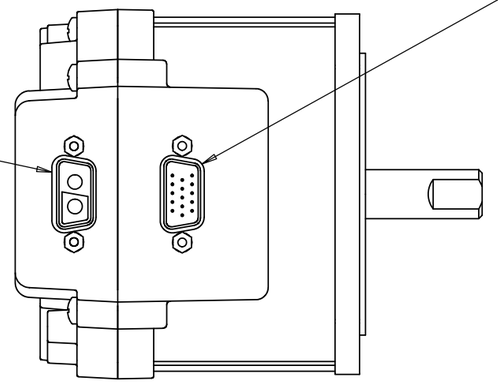

HD15 D-SUB I/O CONNECTOR PINOUT

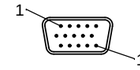

PIN	FUNCTION
1	DIGITAL INPUT 1
2	DIGITAL INPUT 2
3	DIGITAL INPUT 3
4	DIGITAL INPUT 4
5	ANALOG INPUT 1 (+)
6	DIGITAL INPUT 5
7	DIGITAL INPUT 6
8	RS232 Rx/RS485 (-)
9	DIGITAL OUTPUT 1
10	ANALOG INPUT 1(-)
11	DIGITAL OUTPUT 2
12	DIGITAL OUTPUT 3
13	RS232 Tx/RS485 (+)
14	RS232 COMMON
15	ANALOG OUTPUT
Mate: Konmek HS0-15FTB0 Sealed Mate: Konmek HS0-15FTB0 w/ HW1-1 shroud	

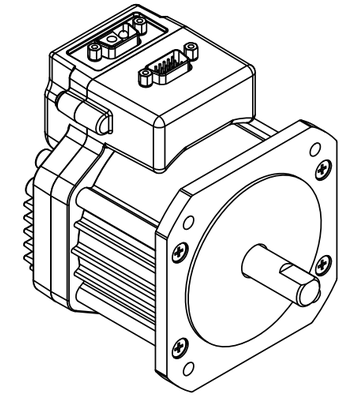

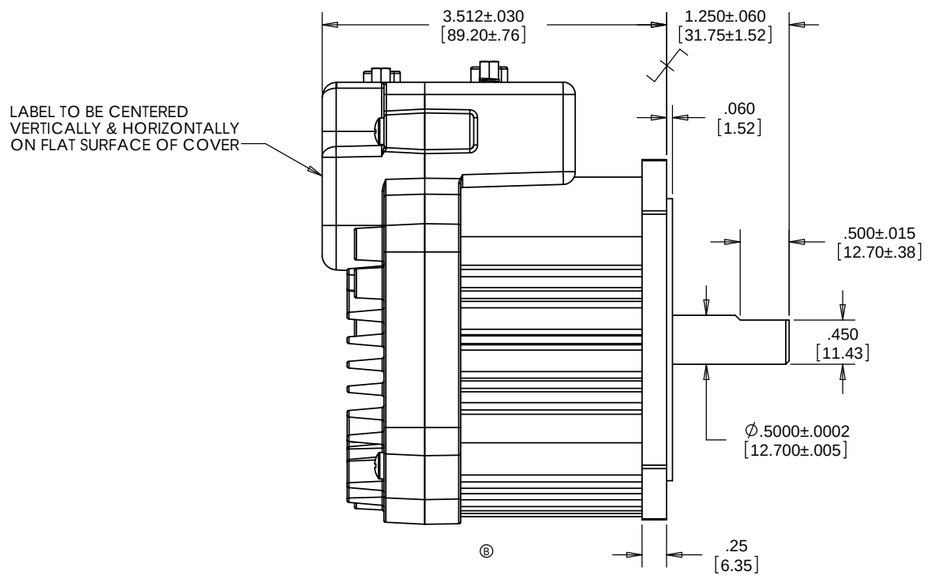

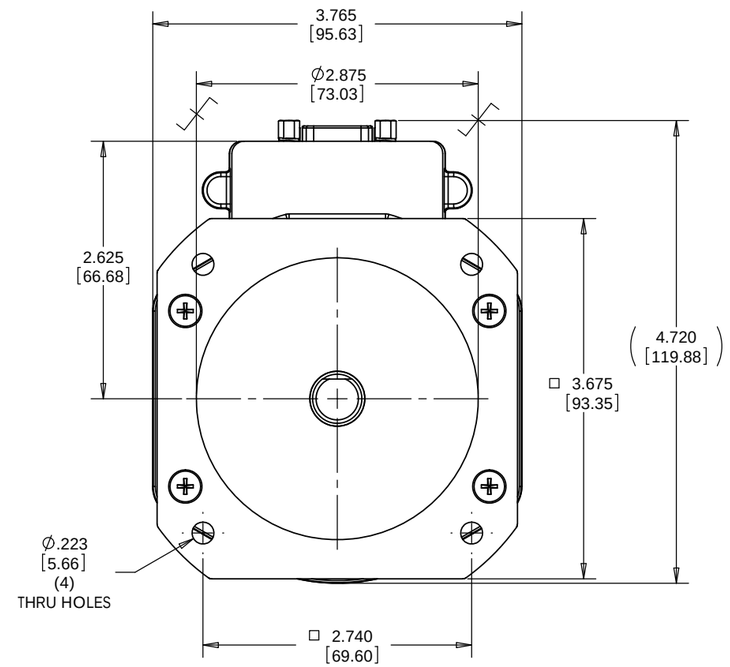

ROTATION TABLE	
SPEED COMMAND	SHAFT ROTATION
+	CWLE
0	STOP
-	CCWLE

ENCLOSURE ------- TOTALLY CLOSED
ROTATION --------- REVERSIBLE (SEE ROTATION TABLE)
LEADS ---------- SEE CONNECTOR PINOUT
END PLAY ---------- CUSHIONED
GROUND TEST ----- 500 VAC 60 HZ. RMS FOR (1) SECOND
PERFORMANCE----SEE SPECIFIC PERFORMANCE CURVE

Ⓐ

ALLIED MOTION MODEL NUMBER	VOLTAGE	SPEED OPTION	SEALED
EMI-095Q2000	12	MED	
EMI-095R2002	24	LOW	
EMI-095G2002	48	LOW	
EMI-095R2003	24	HIGH	
EMI-095G2003	48	HIGH	
EMI-095Q2047	12	MED	X
EMI-095R2018	24	LOW	X
EMI-095G2018	48	LOW	X
EMI-095R2019	24	HIGH	X
EMI-095G2019	48	HIGH	X

REVISIONS

A - REVISED ALL ALLIED MOTION MODEL NOS. #19073 D.W. 10-2-13

B - ENCLOSED SCREW HOLES #19182 DMH 01-27-14

REFER TO ALLIED MOTION OWOSSO SPEC P965001 FOR HAZARDOUS SUBSTANCE RESTRICTIONS

PROPRIETARY AND CONFIDENTIAL
THE INFORMATION CONTAINED IN THIS DRAWING IS THE SOLE PROPERTY OF ALLIED MOTION TECHNOLOGIES. ANY REPRODUCTION IN PART OR AS A WHOLE WITHOUT THE WRITTEN PERMISSION OF ALLIED MOTION TECHNOLOGIES IS PROHIBITED.

DWN. DMH 06-27-13
APP. D.W. 7-11-13
SCALE: 1:1
J.O.# 18967
TYPE BF

Allied Motion OWOSSO

DO NOT SCALE DRAWING

DIMENSIONS ARE IN INCHES
TOLERANCES UNLESS SPECIFIED:
ANGULAR: ±1°
TWO PLACE DECIMAL: ±.01
THREE PLACE DECIMAL: ±.005

MATERIAL SEE CHART
FINISH ----------

DESCRIPTION MOTOR OUTLINE

DWG. NO. 78009001 SHEET 1 OF 1