THIS DOCUMENT CONTAINS PROPRIETARY INFORMATION AND SUCH INFORMATION MAY NOT BE DISCLOSED TO OTHERS FOR ANY PURPOSE WITHOUT WRITTEN PERMISSION FROM GLOBE MOTORS.

REVISIONS

DWG NO. 53S100

REV	DESCRIPTION		DATE	APPROVED
N	REV/RDW ECO 52253/54376/56000	SAM	3-23-92	DWM
P	INC ECO 58074	WEA	7-22-93	JAS
R	INC ECO 58393	WEA	12-21-93	DKM
T	INC ECO 62962	SAM	5-6-96	JAS
U	REV/RDN ECO 66096	MAC	12-12-00	LKB
V	INC ECO 73757	TLP	6-25-04	GS
W	INC ECO 73833	TLP	7-27-04	GS
Y	INC ECN 82760	TLP	5-11-09	GS
AA	INC ECN 114786	TLM	4-18-18	GS
AB	INC ECN 117645	TLM	1-30-19	GS

SHOP STANDARDS

REV																									
SHEET	26	27	28	29	30	31	32	33	34	35	36	37	38	39	40	41	42	43	44	45	46	47	48	49	50

REV																									
SHEET	1	2	3	4	5	6	7	8	9	10	11	12	13	14	15	16	17	18	19	20	21	22	23	24	25

DIMENSIONS ARE IN INCHES. UNLESS OTHERWISE SPECIFIED.

DECIMAL .X ±.030
FRACTION ± 1/64 .XX ±.010
ANGLE ±1° .XXX ±.005

APPLICATION

NEXT ASSY	USED ON
STD	STD

REQ		BOOK
DRAWN JS		1-19-60
CHK BS		9-29-60
ENGR		
APPD JAS		9-25-60
APPD		

GLOBE MOTORS
2275 Stanley Ave.
Dayton, OH 45404

TITLE
SHOP STANDARD

SIZE	CAGE CODE	DWG. NO.
A	25140	53S100

© Copyright 2009, 2018 & 2019 Globe Motors, Inc.

TABLE OF CONTENTS

1.0 GENERAL

2.0 SCOPE AND PURPOSE

3.0 RAW MATERIAL REQUIREMENTS

4.0 TOLERANCES AND MEASUREMENTS

5.0 MANUFACTURING TOLERANCES

6.0 SURFACE ROUGHNESS REQUIREMENTS

7.0 THREADED PARTS

8.0 PLATING AND FINISHING REQUIREMENTS

9.0 ASSEMBLY REQUIREMENTS

10.0 STANDARD PROCEDURE SPECIFICATIONS

INDEX

	PARAGRAPH
ALLOWANCE FOR SIZE	5.16
ASSEMBLY REQUIREMENTS	9.0
BEARING JOURNALS, CHAMFER	5.7.1
BRUSH SHUNT ASSEMBLY REQUIREMENTS	9.12
BURRED SCREWS	9.2
BURRS AND SHARP EDGES	5.7
CENTERLINE - TABS, SLOT KEYWAYS	5.13
CHAMFERS	5.6
CLOVERLEAF	5.10
CONCENTRICITY	5.3
CONCENTRICITY NOT SPECIFIED	5.3.1
REFERENCE CENTERLINE	5.3.2
COUNTERBORED HOLE AND SPOTFACE DIAMETERS	5.2.6
COUNTERSUNK HOLES	5.1
HOLES THRU SHAFTS	5.1.5
SPECIFIED	5.1.3
UNSPECIFIED	5.1.1
TAP - DRILL HOLES	5.1.2
THIN MATERIAL	5.1.4
CUT-OFF TIP	5.12
FLATNESS OR WAVINESS	5.17
GENERAL	1.0
GAGES	
CALIBRATION	4.2.2
"GO" THREAD GAGES	7.1.5.1
"NO GO" THREAD GAGES	7.1.5.2
THREE ROLL THREAD GAGES	7.1.5.3
GLYPTAL	9.5
HOLES	5.2
CENTER DRILL CRITERIA	5.2.8
COMMON CENTERLINE	5.2.7
DIAMETRICAL TOLERANCES	5.2.1
DRILL DRIFT	5.2.4
IN-LINE HOLES	5.2.3
OVERSIZE HOLES	5.2.2
TAP DRILL HOLES	5.2.5
LAMINATIONS	5.19
LEAD LENGTHS, EXPOSED	9.6.1
MACHINED RADII	5.11
MATERIAL REQUIREMENTS, RAW	3.0
MEASUREMENT OF PERFORMANCE PARAMATERS	4.2.3
OUT OF ROUND	5.18
PARALLELISM	5.5
MACHINED WORK	5.5.1
OTHER THAN MACHINED WORK	5.5.2
PART SUBSTITUTION	9.11
PICTORIAL NETWORKS	9.7

INDEX

	PARAGRAPH
PLATING AND FINISHING	8.0
CERTIFICATION	8.3
DAMAGE TO PAINTED SURFACES	8.5
HYDROGEN EMBRITTLEMENT	8.2
MEASUREMENT OF DIMENSIONS	8.4
PASSIVATION	8.6
THICKNESS	8.1
PRODUCTION MEASUREMENT	4.2
PRODUCTION MEASUREMENT INSTRUMENT CALIBRATION	4.2.2
RADIAL DIMENSIONS	5.8
RETAINING RINGS, ASSY OF	9.8
ROUNDED CORNERS	5.7
SCOPE AND PURPOSE	2.0
SHAFT END PLAY	9.10
SLOTS IN SHAFTS	5.14
SOLDERING	9.1
TINNING LEADS	9.4
SQUARENESS ANGULARITY	5.4
MACHINED WORK	5.4.1
SHEET METAL WORK	5.4.2
DRILLED HOLES	5.2.4
STANDARD PROCEDURE SPECIFICATIONS	10.0
STRANDED WIRE	9.3
SURFACE ROUGHNESS REQUIREMENTS	6.0
CAST SURFACES	6.2.2
CHARACTERISTICS	6.3
GROUND SURFACES	6.2.4
MACHINES SURFACES	6.2.1
NUMBERS	6.1.2
PLATED COATED SURFACES	6.2.3
RMS TO AA CONVERSION	6.1.2.1
ROUGHNESS WIDTH CUTOFF	6.4
SPECIFIC REQUIREMENTS	6.2
SYMBOLS	6.1
	6.1.1
STANDARDS	6.5
TANGENCY	5.15
TAPER	5.9
TEMPERATURE, MEASUREMENT	4.2.1
THREADED PARTS	7.0
APPEARANCE	7.1.4
CHAMFER	7.2.3
	7.3.2
CLASSES	7.2.1
	7.3.1
DRILLED HOLES	5.2.5
EXTERNAL	7.2

INDEX

	PARAGRAPH
GAGING	7.1.5
GO GAGES	7.1.5.1
INTERNAL	7.3
LENGTH	7.1.3
NOT GO GAGES	7.1.5.2
PLATING ALLOWANCE AND GAGING	7.2.2
TAP HOLE DIAMETERS	7.4
THREAD FORM	7.1.1
THREADING TO SHOULDER	7.1.2
TOLERANCES	
MANUFACTURING	5.0
TOLERANCES AND MEASUREMENTS	4.0
TOLERANCES (DEFINED)	4.1
UNIT IDENTIFICATION	9.9
NAME PLATES	9.9.1

1.0 GENERAL

THE INFORMATION IN THIS PUBLICATION SUPPLEMENTS, BUT DOES NOT SUPERSEDE, INFORMATION ON DRAWINGS, SPECIFICATIONS, OR PURCHASE ORDERS. IT IS PROVIDED TO BE AN AID IN MANUFACTURE BY DEFINING THE LIMITS OF ACCEPTABLE WORKMANSHIP ON ITEMS THAT ARE NOT DEFINED IN THE SPECIFIC MANUFACTURING INFORMATION. IT DOES NOT APPLY TO TOOLS, MACHINE TOOLS, GAGES, OR TO COMMERCIAL "OFF-THE-SHELF" ITEMS.

1.1 THIS PUBLICATION IS INTENDED TO AID SUPPLIERS IN MANUFACTURING. IT IS BASED ON INCREASED COST FOR THE SUPPLIER, ANY EXPECTATION OF SUCH DIFFICULTIES OR INCREASED COST SHOULD BE INDICATED BY THE SUPPLIER. ACCEPTANCE OF ANY ITEM IS SUBJECT TO THE REQUIREMENTS OF THE DRAWINGS AND SPECIFICATIONS FOR THE ITEM, AND, UNLESS OTHERWISE SPECIFIED THEREIN, CONFORMANCE WITH THE LIMITS OF ACCEPTABLE WORKMANSHIP CONTAINED IN THIS PUBLICATION.

2.0 SCOPE AND PURPOSE

2.1 IT IS IMPRACTICAL, BECAUSE OF LIMITED SPACE AND UNDUE COMPLICATION, TO DEFINE REQUIREMENTS ON THE FACE OF EACH DRAWING; YET MANY OF THESE UNDEFINED DETAILS OF GOOD PRACTICE ARE IMPORTANT. EACH DRAWING, THEREFORE, IMPLIES THAT THESE DETAILS ARE TO BE HELD WITHIN THE LIMIT OF "STANDARD SHOP PRACTICE". REFERENCE TO STANDARD SHOP PRACTICE IS MEANINGLESS, HOWEVER, UNLESS SUCH PRACTICES ARE ACTUALLY STANDARDIZED BY SUITABLE DEFINITIONS AND DESCRIPTIONS.

2.2 THE PURPOSE OF THIS SPECIFICATION IS, THEREFORE, TO DEFINE AND ENLARGE UPON THOSE ITEMS NORMALLY CONSIDERED TO BE WITHIN THE REALM OF STANDARD SHOP PRACTICE.

2.3 IN ALL CASES WHERE SPECIFIC REQUIREMENTS ON DRAWINGS DIFFER FROM THE REQUIREMENTS OF THIS SPECIFICATION, THE DRAWING REQUIREMENTS WILL GOVERN. THIS SPECIFICATION IS INTENDED ONLY TO SUPPLEMENT DRAWINGS ON WHICH THE REQUIREMENT COVERED HEREIN ARE NOT DEFINED, AND IN SUCH CASED, THE REQUIREMENTS ARE MANDATORY.

3.0 RAW MATERIAL REQUIREMENTS

3.1 ALL MATERIALS USED SHALL BE THOSE SPECIFIED ON THE DRAWINGS OR PROCESS. NO SUBSTITUTIONS SHALL BE MADE UNLESS SPECIFICALLY AUTHORIZED BY THE APPLICABLE PRODUCT ENGINEER (FOR MATERIAL COMPOSITION), OR PROCESS ENGINEER (FOR SPECIFIC FORM). UNLESS OTHERWISE SPECIFIED, TITLE BLOCK TOLERANCES SHALL BE ADHERED TO.

4.0 TOLERANCES AND MEASUREMENTS

4.1 TOLERANCES

TOLERANCES AND MEASUREMENT CRITERIA APPLY TO ALL PHYSICAL, CHEMICAL, ELECTRICAL, AND MECHANICAL VALUES, AND THE INSTRUMENTS WITH WHICH THEY ARE MEASURED. TOLERANCES FOR ALL MEASUREMENTS EXPRESSED IN THIS PUBLICATION, ON DETAIL DRAWINGS, OR IN SPECIFICATIONS, GIVE ABSOLUTE VALUES. BY ABSOLUTE, IT IS MEANT FOR THE PURPOSE OF DETERMINING CONFORMANCE WITH TOLERANCES, AN OBSERVED READING IS TO BE COMPARED WITH THE TWO LIMITING VALUES SPECIFIED. ANY DEVIATION, HOWEVER SMALL, OUTSIDE THESE SPECIFIED LIMITING VALUES SIGNIFIES NONCONFORMANCE.

4.2 PRODUCTION MEASUREMENTS

WHEN MEASUREMENTS ARE MADE, ADJUST THE LIMITS AND TOLERANCES SPECIFIED ON DRAWINGS AND SPECIFICATIONS TO COMPENSATE FOR INACCURACIES IN THE MEASURING INSTRUMENT AS WELL AS THE HUMAN ERROR INVOLVED IN THEIR USE. WHEN RING OR PLUG GAGES ARE USED, THEY SHALL CONFORM TO UNILATERAL PRACTICE, IN WHICH GAGE MAKER TOLERANCES SHALL BE WITHIN GAGED TOLERANCE. HUMAN ERROR AND UN-REPEATABILITY OF MEASUREMENT INSTRUMENTS SHALL ALSO CONFORM TO UNILATERAL PRACTICES.

4.2.1 MEASUREMENT TEMPERATURE

MECHANICAL DIMENSIONS ON ALL MATERIALS ARE SPECIFIED AT A TEMPERATURE OF 68° F ± 2° F. IF REFEREE MEASUREMENTS ARE REQUIRED, THE MEASUREMENT SHALL BE MADE AT 68° F ± 2° F.

4.2.2 PRODUCTION MEASURING INSTRUMENT CALIBRATION

THE ACCURACY OF THE MEASURING INSTRUMENTS, GAGES, AND TESTERS, USED IN PRODUCTION INSPECTION FOR TESTING OF PRODUCTS SHALL BE MAINTAINED BY FREQUENT CHECKING OR RECALIBRATION THE STANDARDS USED BY A SUPPLIER IN CHECKING OR CALIBRATING SHALL BE CHECKED OR REFERENCED AGAINST CERTIFIED STANDARDS. RECORDS SHALL BE KEPT FOR EACH INSTRUMENT CHECKED OR CALIBRATED AGAINST THE CERTIFIED STANDARDS AND SUCH RECORDS SHALL BE RETAINED BY THE SUPPLIER AND MADE AVAILABLE TO GLOBE MOTORS UPON REQUEST.

4.2.3 MEASUREMENT OF PERFORMANCE PARAMETERS

UNLESS OTHERWISE SPECIFIED, MEASUREMENTS SHALL BE MADE IN BOTH DIRECTIONS OF ROTATION FOR DYNAMIC PERFORMANCE PARAMETERS. THIS APPLIES TO UNITS OTHER THAN PUMPS, BLOWERS, FANS, ETC… (WHICH ARE DESIGNED TO OPERATE IN ONE DIRECTION ONLY).

5.0 MANUFACTURING TOLERANCE

5.1 COUNTERSUNK HOLES

5.1.1 UNSPECIFIED

WHENEVER PRACTICAL, ALL PIERCED OR DRILLED HOLES, NOT SPECIFIED AS COUNTERSUNK SHALL BE COUNTERSUNK WITH AN 82° INCLUDED ANGLE COUNTERSINK TOOL FOR BURR REMOVAL. THIS COUNTERSINK WILL BE CONSIDERED SATISFACTORY WHEN THE SURFACE IS BROKEN FROM .005" TO .010" PER SIDE.

5.1.2 TAPPED HOLES

HOLES COUNTERSUNK PRIOR TO TAPPING SHALL BE COUNTERSUNK WITH AN 82° INCLUDED ANGLE COUNTERSINK TOOL AND THE LARGE DIAMETER SHALL FALL BETWEEN THE MAXIMUM THREAD DIAMETER AND A DIAMETER .015" LARGER.

5.1.3 SPECIFIED

A SPECIFIED COUNTERSINK SHALL BE MEASURED ACROSS THE LARGE DIAMETER AND THE ANGLE SHALL BE HELD TO THE LIMITS SPECIFIED.

5.1.4 THIN MATERIAL

WHEN MATERIAL THICKNESS IS TOO THIN TO ALLOW A FULL COUNTERSINK WITHOUT DISTURBING BASIC HOLE SIZE, THE COUNTERSINK DIMENSIONS WILL BE HELD, DISREGARDING THE BASIC HOLE SIZE.

5.1.5 HOLES THRU SHAFTS

HOLES THRU SHAFTS SHALL BE COUNTERSUNK WITH AN 82° INCLUDED ANGLE COUNTERSINKING TOOL TO A MINIMUM SURFACE BREAK OF .005". MAXIMUM SURFACE BREAK SHALL BE AS CONTROLLED BY MINIMUM BREAK LIMITS OF PAR. 5.1.1, SHAFT DIAMETER AND HOLE DIAMETER. SEE FIGURE 1.

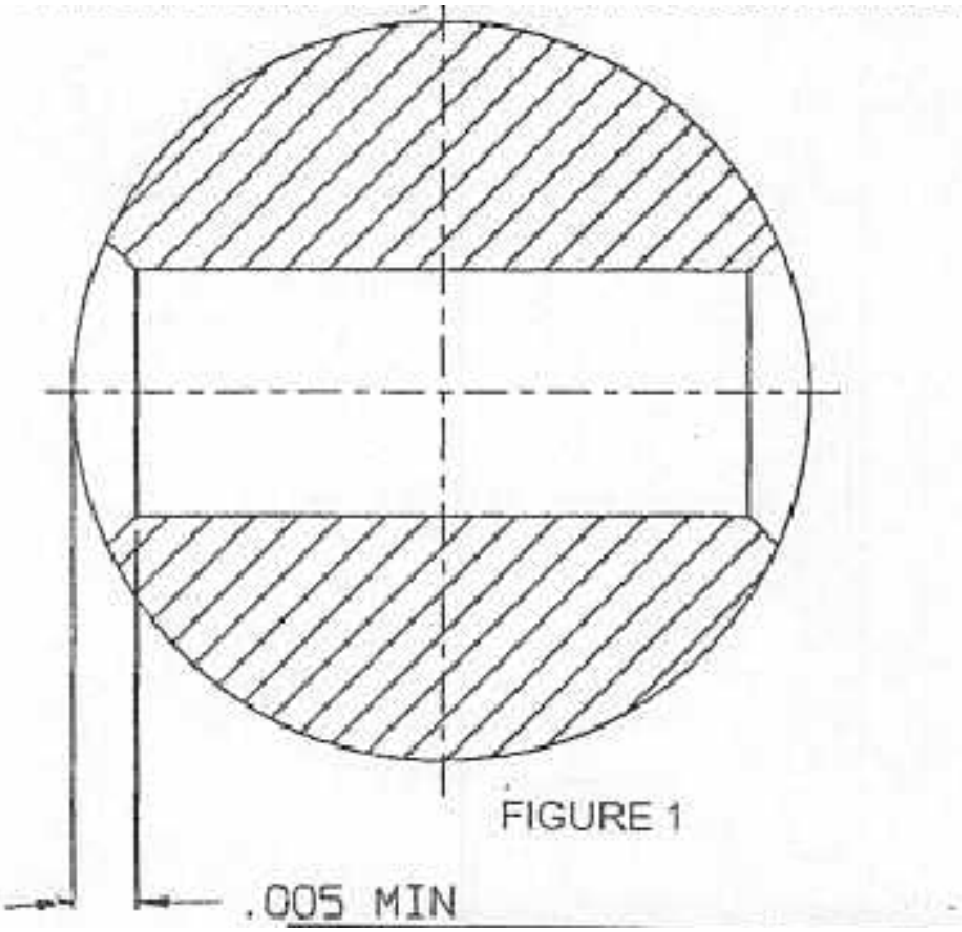

FIGURE 1

5.2 HOLES

5.2.1 DIAMETRICAL TOLERANCES

UNLESS OTHERWISE SPECIFIED DIAMETRAL TOLERANCES OF DRILLED OR PIERCED HOLES SHALL CONFORM TO THE VALUES LISTED IN TABLE 1.

TOLERANCES, DRILLED HOLE DIAMETERS

DRILL SIZE	DECIMAL EQUIVALENT	DEPTH OF HOLE	ALLOWABLE TOLERANCE	
80	.0135	0” THRU 3/8	+.002	-.0005
THRU				
61	.0390	3/8” THRU	+.003	-.001
60	.0400	0” THRU 1/2	+.003	-.001
THRU				
28	.1405	1/2” THRU	+.004	-.002
9/64	.1406	0” THRU 3/4”	+.004	-.001
THRU				
1	.2280	3/4” THRU	+.0055	-0025
A	.2340	0” THRU 1	+.0045	-.001
THRU				
Z	.4130	1” THRU	+.006	-.0025
27/64	.4219	0” THRU 1”	+.006	-.001
THRU				
11/16	.6875	1” THRU	+.007	-.0025
45/64	.7031	0” THRU 1”	+.008	-.002
THRU				
63/64	.9844	1” THRU	+.008	-.003
1”	1.000	0” THRU 1”	+.010	-.003
THRU				
1 31/64	1.4844	1” THRU	+.010	-.004
1 ½	1.500	0” THRU 1”	+.012	-.005
THRU				
2”	2.000	1” THRU	+.012	-.006

TABLE 1

5.2.2 OVERSIZE HOLES

A HOLE SHALL BE CONSIDERED OVERSIZE WHEN THE TOTAL LENGTH OF OVERSIZE LENGTH EXCEEDS THE VALUE IN TABLE 2, BELOW.

HOLE DIAMETER TOLERANCE	MAX. LENGTH OVERSIZE
STANDARD HOLE TOLERANCE AND UP (SEE TABLE 1)	50 %
± .001 UP TO STANDARD	20%
± .00099 AND LESS	10 %

TABLE 2

THIS STANDARD DOES NOT APPLY TO ANY HOLES (DRILLED OR CAST) THAT ARE SPECIFIED AS "CO-FORM TAP HOLES". THESE HOLES MUST MEET GO, NO GO STANDARD SPECIFIED ON PRINT.

5.2.3 IN-LINE HOLES

ANY HOLES SHOWN IN LINE SHALL BE TREATED TOGETHER AS ONE HOLE AND TOGETHER SHALL ACCEPT A STANDARD "GO" GAUGE FOR ACCEPTANCE. SEE FIGURE # 2

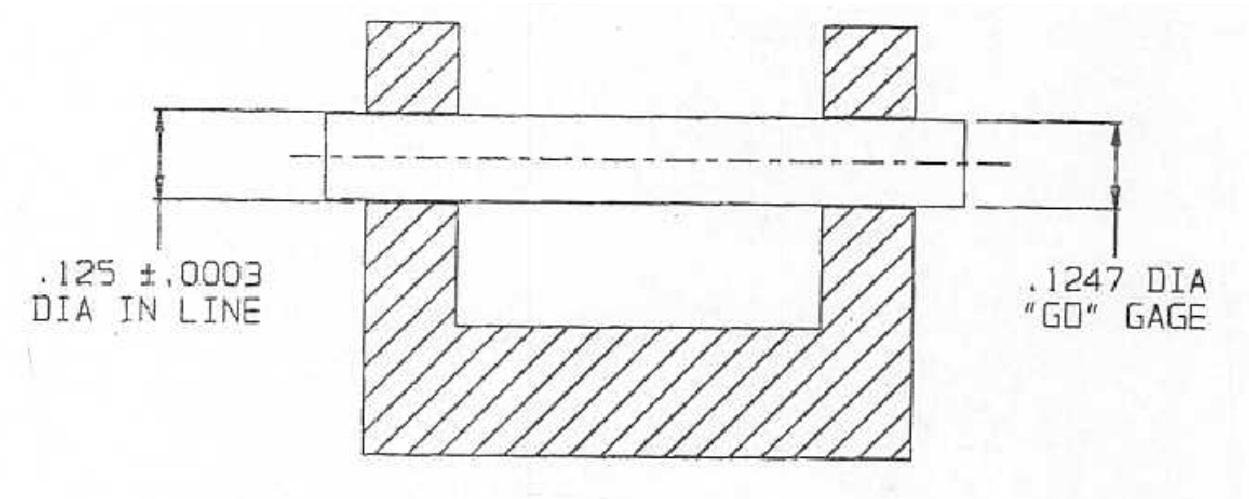

FIGURE 2

5.2.4 DRILL DRIFT

MAXIMUM DRILL DRIFT SHALL NOT EXCEED VALUES SHOWN IN TABLE 3, SEE FIGURE 3.

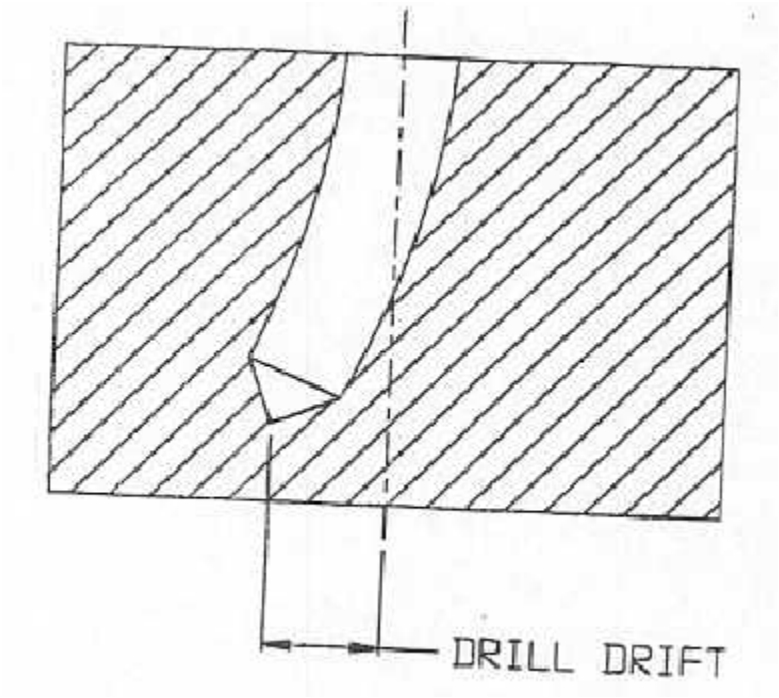

FIGURE 3

DRILL SIZE	DRILL DRIFT			
	DRILL DEPTH	1/4	1/2	1
80 (.0135 TO 70 (.028)		.031		
69 (.0292) TO 60 (.040)		.015	.025	
59 (.041) TO 55 (.052)			.015	.025
54 (.055) TO 50 (.070)			.010	.020
49 (.073) TO 40 (.098)			.008	.018
39 (.0995) TO 30 (.1285)			.006	.015

TABLE 3

5.2.5 TAP DRILLS

TAP DRILLS USED FOR CUTTING TAPS SHALL CONFORM WITH TABLE 4. DIAMETRICAL TOLERANCE SHALL BE AS SPECIFIED IN SECTION 5.2.1, TABLE 1. THIS TABLE DOES NOT APPLY TO COLD FORMING TAPS.

THREAD TO BE TAPPED	TAP DRILL TO BE USED
# 0-80	3/64 (.0469)
# 1-72	# 53 (.0595)
# 2-56	# 50 (.0700)
#3-48	# 46 (.0810)
# 3-56	# 45 (.0820)
# 4-40	# 43 (.0890)
# 4-48	# 42 (.0935)
# 5-40	# 38 (.1015)
# 6-32	# 34 (.1110)
# 8-32	# 29 (.1360)
# 10-32	# 21 (.1590)

TABLE 4

5.2.6 COUNTERBORED HOLE AND SPOTFACE DIAMETERS

THE SHARP CORNERS PRODUCED BY A STANDARD TOOL ARE SATISFACTORY FOR BOTH COUNTERBORED HOLES AND SPOTFACE DIAMETERS. THE FINISH SHALL BE 125 RMS OR BETTER. SPOTFACING SHALL PROVIDE A 75 % MINIMUM BEARING AREA AROUND HOLES.

5.2.7 HOLES, OR OTHER FEATURES, SHOWN ON CENTERLINES –

FEATURES SHOWN ON CENTER LINES, BUT NOT DIMENSIONED, SHALL LIE ON CENTERLINE WITHIN THE SAME TOTAL TOLERANCE AS APPLIED TO THEIR LOCATING DIMENSION.

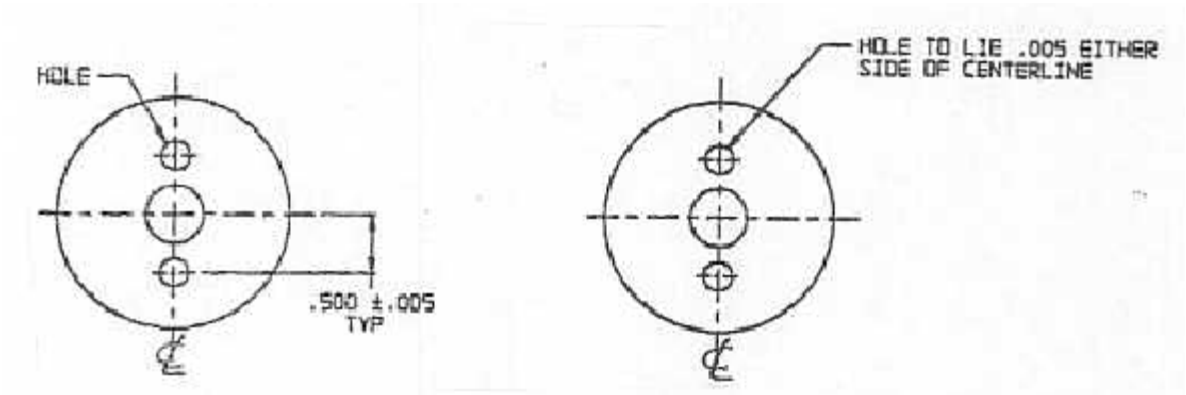

NOTE: FOR RELATIONSHIPS OF CENTERLINE OF FEATURES IN ROUND SHAFTS, SEE PARA. 5.14

5.2.8 CENTER DRILL CRITERIA

WHEN “CENTERS ARE PERMISSIBLE” ARE STATED ON A PRINT, UNLESS OTHERWISE SPECIFIED, NO OUTSIDE FEATURE SHALL BE LESS THAN TWICE THE RADIUS OF THE CENTER DRILL.

5.3 CONCENTRICITY OF MACHINE SURFACES

5.3.1 CONCENTRICITY NOT SPECIFIED

UNLESS OTHERWISE SPECIFIED, ALL DIAMETERS, RADII, OR ARCS WHICH ARE GENERATED ABOUT A COMMON THEORETICAL CENTER SHALL BE CONCENTRIC TO A COMMON CENTER OR REFERENCED SURFACE WITHIN .006 T.I.R.

5.3.2 REFERENCE CENTERLINE

USE THE CENTERLINE OF THE DIAMETER HAVING THE SMALLEST TOLERANCE AS THE REFERENCE LINE TO ESTABLISH THE OTHER DIAMETERS.

5.4 SQUARENESS AND ANGULARITY

5.4.1 MACHINED WORK

ANGULARITIES OF MACHINED PARTS ARE TO BE GOVERNED BY TITLE BLOCK TOLERANCES. UNLESS OTHERWISE SPECIFIED, MACHINED PARTS SHOWN SQUARE (90°) TO A CENTER LINE OR SURFACE SHALL BE SQUARE WITHIN .003 PER INCH OF LENGTH OR DIAMETER. SUCH A TOLERANCE DESIGNATES THAT ALL POINTS ON THE SURFACE IN QUESTION SHALL LIE BETWEEN TWO PARALLEL PLANES SEPARATED BY THE APPROPRIATE TOLERANCE ZONE, EACH PLANE OF WHICH IS PERPENDICULAR TO THE AXIS OR SURFACE REFERENCED. SEE FIGURE 4.

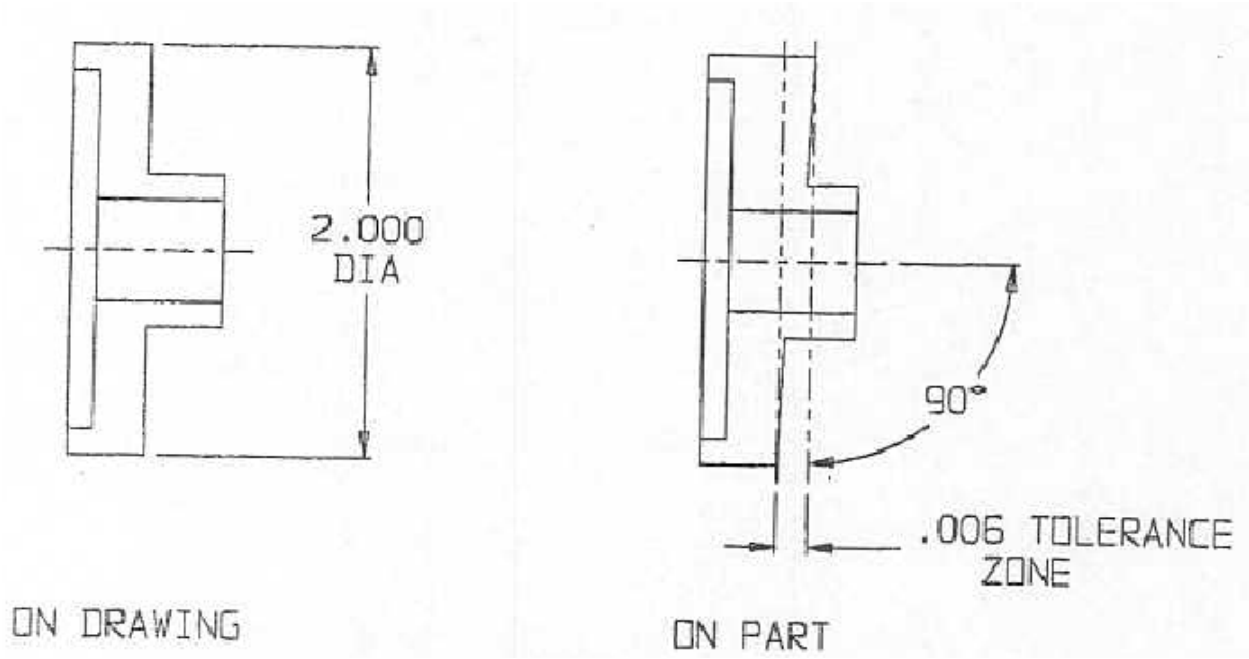

FIGURE 4

5.4.2 SHEET METAL WORK

UNLESS OTHERWISE SPECIFIED, ALL SURFACES SHOWN AS BEING PERPENDICULAR SHALL BE PERPENDICULAR ONLY WITHIN THE LIMITS AS ESTABLISHED BY LOCATING DIMENSIONAL TOLERANCES.

5.5 PARALLELISM

5.5.1 MACHINED WORK

FOR MACHINED SURFACES THE MAXIMUM PERMISSIBLE OUT-OF-PARALLEL SHALL BE 1/2 OF THE TOLERANCE OF THE DIMENSION BETWEEN MACHINE SURFACES.

5.5.2 OTHER THAN MACHINED WORK

FOR PARALLEL SURFACES PRODUCED BY METHODS OTHER THAN MACHINING, THE PERPENDICULAR DISTANCE BETWEEN THE SURFACES MUST NOT EXCEED LIMITS DEFINED BY THE APPLICABLE DRAWING DIMENSIONS AND TOLERANCES.

5.6 CHAMFER

A 45° CHAMFER SHALL BE MEASURED IN THE PLANE OF THE ADJACENT SIDE RATHER THAN THE CHAMFER FACE AND WILL BE ALLOWED AN ANGULAR TOLERANCE OF ± 5° INSTEAD OF ± 1° TITLE BLOCK TOLERANCE. CORNERS SPECIFIED AS SHARP ON A DRAWING ARE TO BE DEBURRED AND HAVE A MAXIMUM CORNER RADIUS OR CHAMFER OF .002".

5.7 BURRING AND BROKEN EDGES

ALL BURRS ON MACHINED PARTS INCLUDING HOLES (DRILLED, REAMED, OR PIERCED) AND THREADS MUST BE REMOVED WHEN PRACTICAL EVEN IF THIS REQUIREMENT IS NOT NOTED ON DRAWING. A BURR IS DEFINED AS ALL MATERIAL EXTENDING BEYOND THE INTERSECTING SURFACES. SHARP EDGES MAY BE BROKEN BY ANY PROCESS WHICH PRODUCES A TRUE RADIUS, UNEVEN RADIUS OR FLAT SURFACE WHICH EXTENDS NO FURTHER THAN .010" MAXIMUM FROM THE POINT OF INTERSECTION TO THE FAIRING POINT ON EACH OF THE TWO INTERSECTING SURFACES. SEE FIGURE 5.

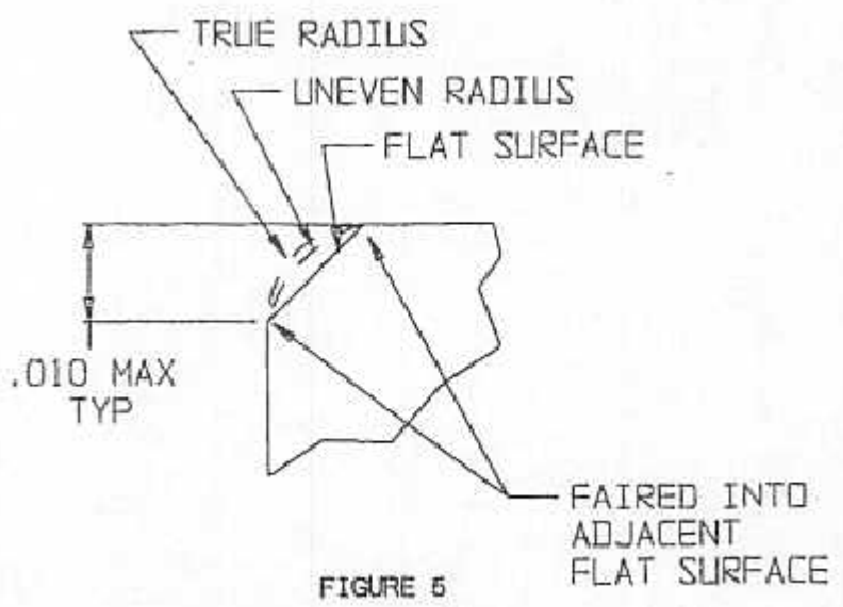

FIGURE 5

5.7.1 BEARING JOURNALS

UNLESS OTHERWISE SPECIFIED, BEARING JOURNAL EDGES SHALL BE TREATED AS SHOWN BELOW.

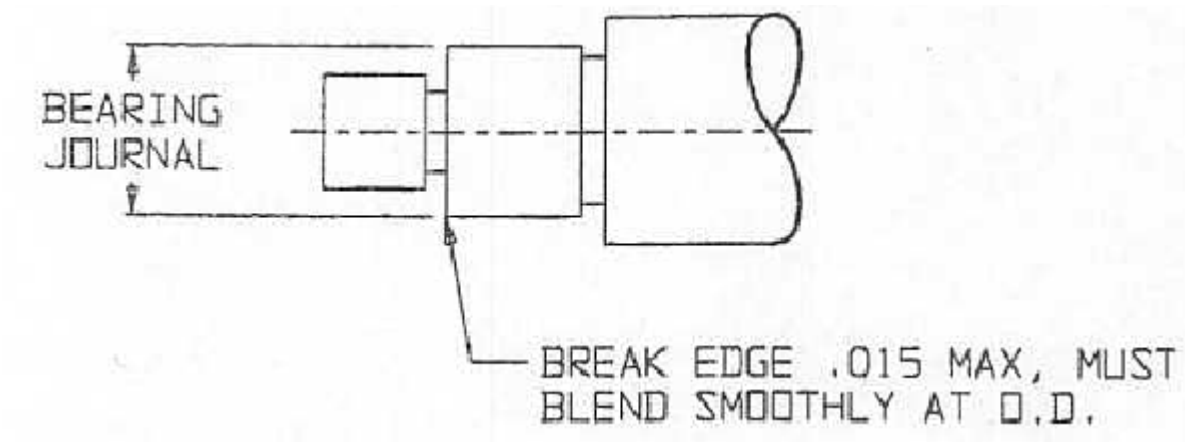

5.7.2 EDGE BREAK – CONTOUR NOT DEFINED

WHEN AN EDGE BREAK, OR CORNER BREAK IS SPECIFIED ON A DRAWING AND THE CONTOUR IS NOT DEFINED, IT SHALL BE ASSUMED AS A 45° CHAMFER

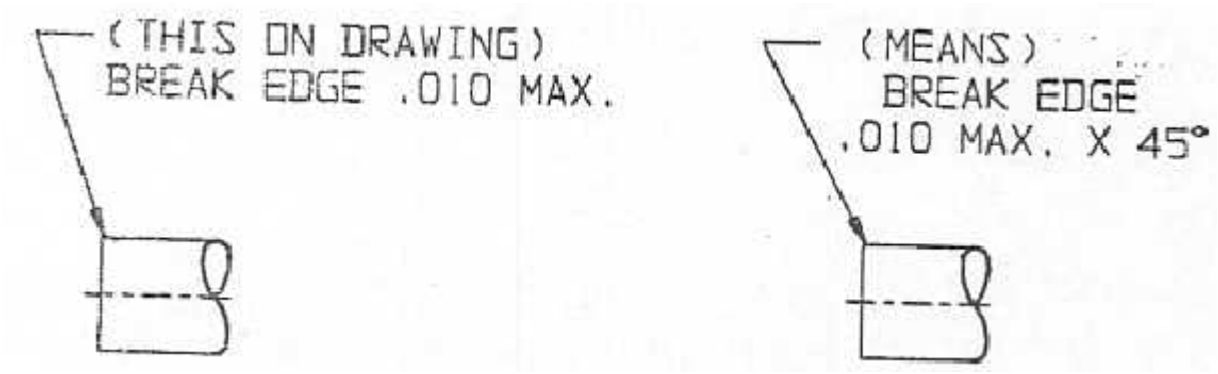

5.7.3 IMPLIED OPERATIONS

WHEN AN OPERATION IS SPECIFIED SUCH AS CHAMFER, BREAK EDGE, ETC., THE PART SHALL SHOW EVIDENCE OF THE OPERATION REGARDLESS OF TOLERANCE ALLOWANCE.

EXAMPLE: CHAMFER 1/64 ± 1/64 X 45°
(THERE MUST BE EVIDENCE OF CHAMFER)

5.8 END RADII OF SLOTS, DEPRESSIONS, ETC.

WHEN A RADIUS IS INDICATED BY THE LETTER "R", THE LIMITS OF THE SLOT, DRESSION, OR EXTREMITY ARE CONTROLLING, AND THE POINTS OF COINCIDENCE BETWEEN RADII AND SIDES SHALL BE EITHER TANGENT OR BLENDED. FOR EXAMPLE, IN FIGURE 6, R = 1/2 (.134 +.000 -.002)

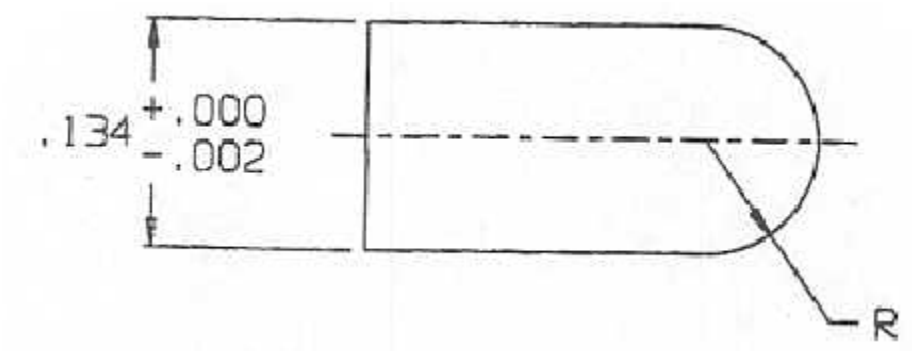

FIGURE 6

5.9 TAPER (GRINDING)

TAPER SHALL BE .0001" MAXIMUM FOR DIAMETERS HELD FOR 1" OF LENGTH OR LESS. OVER 1" OF LENGTH, TAPER SHALL BE .0001" PER INCH OF LENGTH. WHERE THESE LIMITATIONS CONFLICT WITH PRINT TOLERANCES, PRINT TOLERANCES WILL CONTROL. ALL TAPER MUST BE WITHIN DIAMETRAL LIMITS.

5.10 CLOVERLEAF (CENTERLESS GRINDING)

VALUES OF CLOVERLEAF SHALL BE WITHIN 10% OF THE DIMENSIONAL TOLERANCES OF DIAMETER FOR ALL CENTERLESS GROUND PARTS EXCEPT THAT FOR DIAMETER TOLERANCES OF .002” OR LESS THE TOTAL PERMISSILE CLOVERLEAF WHETHER MEASURED WITH V-BLOCK (60º INCLUDED ANGLE) OR AIR RING SHALL BE .0002” TOTAL INDICATOR READING. WHERE THESE LIMITATIONS CONFLICT WITH PRINT TOLERANCES, PRINT TOLERANCES WILL CONTROL. SEE FIGURE 7.

EXAMPLE OF CLOVERLEAF

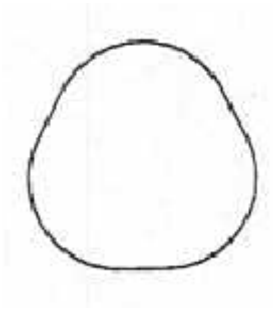

FIGURE 7

5.11 MACHINED RADII

UNLESS OTHERWISE SPECIFIED, INSIDE CORNER RADII ON ALL MACHINE OPERATIONS SHALL BE .010 MAXIMUM. IN GROUND CORNERS WHERE UNDERCUTS ARE NOT PERMISSIBLE, CORNER RADII MAY BE .062 MAXIMUM.

5.12 CUT-OFF-TIP

THE MATERIAL LEFT AFTER THE STOCK BREAKS AWAY BEFORE THE CUT-OFF TOOL HAD COMPLETED ITS OPERATION SHALL HEREIN BE CALL A CUT-OFF TIP. UNLESS OTHERWISE NOTED, THE CUT-OFF TIP SHALL BE COMPLETELY REMOVED.

5.13 RELATIONSHIPS OF CENTER LINES OF HOLES, TABS, SLOTS, AND KEYWAYS IN ROUND SHAFTS

THE INDIVIDUAL CENTER LINES OF HOLES, TABS, SLOTS, AND KEYWAYS SHALL BE LOCATED WITHIN .004 TOTAL OF SHAFT CENTER LINE (.002 ON EITHER SIDE OF CENTER LINE), UNLESS OTHERWISE SPECIFIED ON THE PRINT.

5.14 SLOTS IN ENDS OF ROUND SHAFTS

WHEN SLOTS ARE CUT IN THE END OF ROUND SHAFTS, THE SLOT WIDTH TOLERANCE MUST BE HELD TO PRINT REQUIREMENT WHEN SHAFT O.D. IS CONFINED TO ITS TOLERANCE.

5.15 TANGENCY

LINES, SURFACES, PORTIONS OF ASSEMBLIES ON PARTS SHOWN AS TANGENT OR FLUSH SHALL BE TANGENT OR FLUSH WITHIN STANDARD TOLERANCE OF ± .005 UNLESS OTHERWISE SPECIFIED.

5.16 ALLOWANCE FOR SIZE

ON DRAWINGS, WHERE AN ADDITIVE FINISH OR HEAT TREAT IS SPECIFIED, SUCH DIMENSIONS INCLUDE THE INCREASE OR DECREASE IN SIZE DUE TO THE APPLICATION OF THE FINISH OR HEAT TREAT. TOLERANCES AS SPECIFIED APPLY OVER THE FINISH.

5.17 FLATNESS OR WAVINESS

UNLESS OTHER WISE SPECIFIED ALL MACHINED SURFACES SHALL BE FLAT WITHIN .004 T.I.R. MAXIMUM.

5.18 OUT OF ROUND (GRINDING)

OUT OF ROUND SHALL BE WITHIN 10% OF THE DIMENSIONAL TOLERANCE OF DIAMETER EXCEPT THAT UNDER .002" TOLERANCE OF DIAMETER, THE MAXIMUM PERMISSIBLE OUT OF ROUND SHALL BE .0002". WHERE THESE LIMITATIONS CONFLICT WITH PRINT TOLERANCES, PRINT TOLERANCES WILL CONTROL. ALL OUT OF ROUND MUST FALL WITHIN DIAMETRAL LIMITS.

5.19 LAMINATIONS

UNLESS OTHERWISED SPECIFIED, LAMINATIONS MUST CONFORM TO THE FOLLOWING REQUIREMENTS.

5.19.1 GENERAL REQUIREMENTS

LAMINATION SURFACES SHALL BE FREE OF WRINKLES, SHARPLY DEFINED DEPRESSIONS OR RIDGES.

5.19.2 FLATNESS

IF FLATNESS IS NOT OTHERWISE SPECIFIED, LAMINATIONS SHALL CONFORM TO THE FOLLOWING REQUIREMENTS.

5.19.2.1 THICKNESS

THE LAMINATION THICKNESS SHALL BE UNIFORM FROM SIDE TO SIDE WITHIN 0.0005 INCHES.

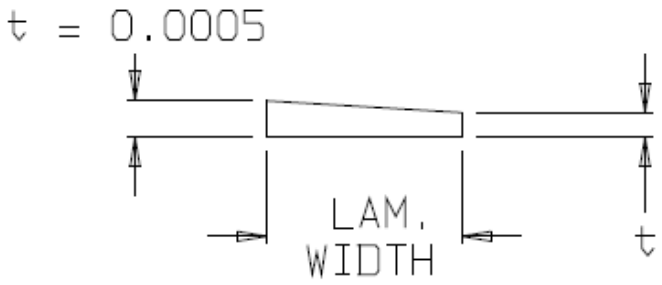

5.19.2.2 SURFACE IRREGULARITIES

SURFACE IRREGULARITIES SUCH AS BOWING, OIL-CANNING, SPRINGBACK AND WARPAGE THAT EXCEED THE TOLERANCES GIVEN IN FIGURE BELOW ARE NOT ALLOWED. THIS APPLIES TO THE FINISHED LAMINATION; I.E. AFTER ANNEAL, IF IT IS AN ANNEALED LAMINATION.

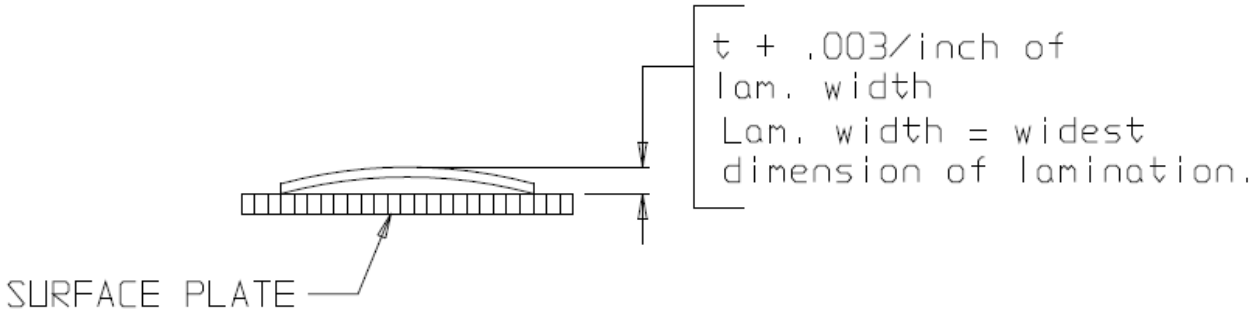

5.19.3 BURRS

IF BURRS ARE NOT OTHERWISE SPECIFIED, LAMINATIONS SHALL CONFORM TO THE FOLLOWING REQUIREMENTS.

5.19.3.1 BURR HEIGHT

THE MAXIMUM BURR HEIGHT ALLOWED SHALL BE LESS THAN 0.002 INCHES. IF A BURR IS PRESENT AT ONE OR MORE LOCATIONS, IT IS INDICATING THAT THE DIE IS CHIPPED OR BROKEN AT THOSE AREAS AND THE VENDOR SHALL BE NOTIFIED TO REPAIR THE DIE PRIOR TO A SUBSEQUENT ORDER BEING FILLED.

5.19.3.2 BURR LOCATION

BURRS THAT EXTEND INTO THE SLOT OR SHAFT HOLE AREAS ARE NOT ALLOWED. AN EXAMPLE OF THIS TYPE OF BURR IS SHOWN BELOW.

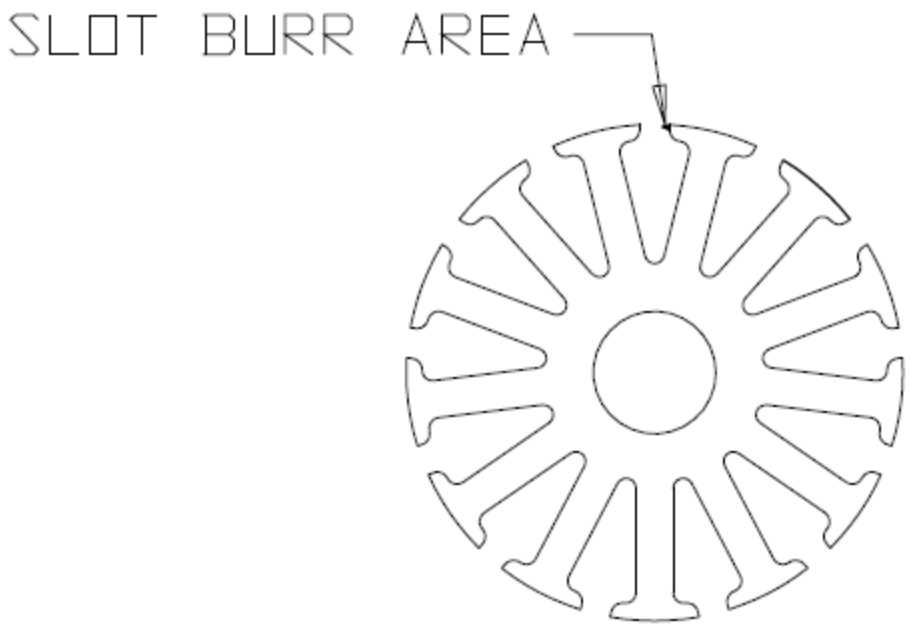

6.0 SURFACE ROUGHNESS REQUIREMENTS

6.1 SURFACE ROUGHNESS SYMBOLS

SURFACE ROUGHNESS IS EXPRESSED BY SYMBOLS ON THE DRAWINGS THE SYMBOLS AGREE WITH ANSI B46.1, OBTAINABLE FROM: AMERICAN SOCIETY OF MECHANICAL ENGINEERS, 347 EAST 47TH ST., NEW YORK, NEW YORK 10017.

6.1.1 BASIC SYMBOL

THE BASIC SYMBOL IS √, PLACED ON A LINE INDICATING THE SURFACE, ON AN EXTENSION OR LEADER LINE, OR IN A NOTE.

6.1.2 SURFACE ROUGHNESS NUMBERS

THE SURFACE ROUGHNESS NUMBER IS BASED ON THE ARITHMETICAL AVERAGING SYSTEM (AA). IN THIS SYSTEM, MEASUREMENTS OF THE HEIGHTS AND DEPTHS OF SURFACE ROUGHNESS IRREGULARITIES ARE SUMMED, THEN DIVIDED BY THE TOTAL NUMBER OF MEASUREMENTS TAKEN. THE RESULTANT SURFACE NUMBER IS COMBINED WITH THE SYMBOL THUS: $^{63}\sqrt{}$,

6.1.2.1 CONVERSIONS OF ROOT MEAN SQUARE (RMS) TO ARITHMETICAL AVERAGE (AA)

THE ACCEPTABLE CONVERSION OF RMS TO AA ROUGHNESS NUMBERS IS EXPRESSED BY:

$$AA = \frac{RMS}{1.11}$$

6.2 SPECIFIC REQUIREMENTS

6.2.1 MACHINED SURFACES

ALL MACHINED SURFACES SHALL BE UNIFORM IN APPEARANCE AND NOT EXCEED 125 MICROINCHES MAXIMUM, UNLESS OTHERWISE SPECIFIED. (SEE NOTE 6.2.5)

6.2.2 CAST SURFACE

ALL CAST SURFACES SHALL BE 250 MICROINCHES MAXIMUM.

6.2.3 PLATED AND COATED SURFACES

SURFACE ROUGHNESS DESIGNATIONS APPLY AFTER PLATING AND/OR APPLICATION OF DRY-FILM LUBRICANTS AND BEFORE PAINTING.

6.2.4 GROUND SURFACES

UNLESS OTHERWISE SPECIFIED, ALL GROUND SURFACES SHALL BE 15 MICROINCHES MAXIMUM.

6.2.5 MACHINED SURFACES

ALL MACHINED DIAMETERS WITH A TOLERANCE OF .001 OR LESS SHALL BE UNIFORM IN APPEARANCE AND NOT EXCEED 64 MICROINCHES MAXIMUM, UNLESS OTHERWISE SPECIFIED.

6.3 SURFACE CHARACTERISTICS

ROUGHNESS WIDTH, ROUGHNESS WIDTH CUTOFF, ROUGHNESS HEIGHT, WAVINESS HEIGHT, AND WAVINESS WIDTH ARE DEFINED GRAPHICALLY IN FIGURE 8.

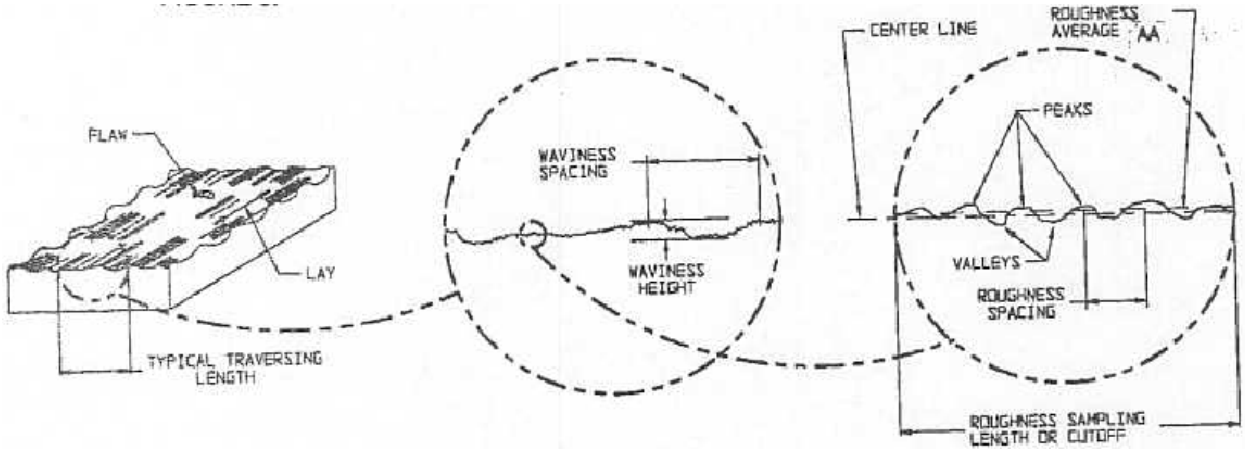

FIGURE 8

6.4 ROUGHNESS WIDTH CUTOFF

ROUGHNESS WIDTH CUTOFF IS A UNIT LENGTH OF THE PROFILE OVER WHICH THE IRREGULARITIES OF THE SURFACE PROFILE ARE AVERAGED TO OBTAIN THE ROUGHNESS HEIGHT RATING. ROUGHNESS WIDTH CUTOFF MUST ALWAYS BE GREATER THAN ROUGHNESS WIDTH, AND .030 CUTOFF IS STANDARD.

6.5 SURFACE ROUGHNESS STANDARDS

GENERAL ELECTRIC "ROUGHNESS COMPARISON SPECIMENS", (CATALOG NO. 8651831G2) ARE ACCEPTABLE STANDARDS FOR COMPARISON WITH THE VARIOUS ACTUAL SURFACES UNDER INSPECTION.

6.6 CASTING SURFACE ISSUES

6.6.1 GENERAL GUIDELINES

A DEFECT CAN BE A SINGLE EVENT OR A COLLECTION OF EVENTS (POROSITY) THAT ARE VISIBLE TO THE NAKED EYE AND AS DEFINED ELSEWHERE IN THIS SECTION.

UNLESS OTHERWISE SPECIFIED ON THE PRINT:

1. A DEFECT IS NOT ACCEPTABLE UNLESS IT IS MINOR ENOUGH IN SIZE THAT IT WILL BE TOTALLY CLEANED UP IN A SUBSEQUENT MACHINING OPERATION.

2. A DEFECT IS NOT ACCEPTABLE UNLESS IT IS MINOR ENOUGH TO STILL MEET PRINT REQUIREMENTS.

3. A DEFECT IS NOT ACCEPTABLE IN SEALING SURFACES SUCH AS “O” RINGS, GASKETS OR ANY OTHER CRITICAL LEAK PATH AREAS.

4. A DEFECT IS NOT ACCEPTABLE IF IT IS VISIBLE TO THE CUSTOMER.

6.6.2 RAW CASTINGS

BREAKOUTS IN GATING OR VENTING AREAS

ANY VOID IN A GATING OR VENTING AREA IS NOT ACCEPTABLE UNLESS IT IS MINOR ENOUGH IN DEPTH THAT IT WILL BE TOTALLY CLEANED UP IN A SUBSEQUENT MACHINING OPERATION.

EXCESS MATERIAL MAY NOT PROJECT BEYOND THE FEATURE SPECIFICATION MAXIMUM DIMENSION UNLESS IT IS ON A SURFACE THAT WILL BE SUBSEQUENTLY MACHINED AWAY.

SUB-FLUSH EJECTOR PIN MARKS

ANY VOID IN AN EJECTOR PIN MARK IS NOT ACCEPTABLE UNLESS IT IS MINOR ENOUGH IN DEPTH THAT IT WILL BE TOTALLY CLEANED UP IN A SUBSEQUENT MACHINING OPERATION.

PARTING LINES

PARTING LINES SHOULD NOT EXCEED THE FEATURE SPECIFICATION MAXIMUM/MINIMUM UNLESS ON A SURFACE THAT WILL BE SUBSEQUENTLY MACHINED AWAY.

BLISTERS/PIMPLES

SURFACE AREAS THAT ARE RAISED OR SUNKEN AREAS ARE NOT ALLOWED.

KNIT LINES

SHOULD NOT PRODUCE MATERIAL THAT IS DIMENSIONALLY DIFFERENT FROM ONE SIDE OF THE KNIT LINE TO THE OTHER, AND SHOULD NOT PRODUCE A VOID THAT IS MEASURABLE WHERE THE KNIT LINES SHOULD MEET.

CONTAMINATION

ANY FOREIGN MATERIAL DETECTABLE UNDER UN-MAGNIFIED CONDITIONS IN ANY SURFACE OF THE PART IS NOT ACCEPTABLE.

CRACKS

CRACKS SHOULD NOT BE VISIBLE ON THE SURFACE.

TOOL WITNESS MARKS

TOOL WITNESS MARKS ARE PERMISSIBLE IF THEY DO NOT CAUSE EXCESSIVE FLASH, BUT SHOULD BE REMOVED IF ON A CUSTOMER EXPOSED SURFACE THAT IS NOT MACHINED AWAY DURING SUBSEQUENT MACHINING OPERATIONS.

FLASH

ACCEPTABLE AS LONG AS IT CAN EASILY BE REMOVED DURING NORMAL SUBSEQUENT MACHINING OPERATIONS. ABNORMALLY EXCESSIVE FLASH THAT RESULTS IN ALTERING OTHER CASTING SURFACES OR DIMENSIONS IS NOT ALLOWED.

NON-FILL/VOID

AREAS NOT PROPERLY FILLED WHERE MATERIAL IS SUPPOSED TO BE ARE NOT ALLOWED.

PIT/PINHOLE/POROSITY

SHOULD NOT BE PRESENT ON THE SURFACE OF THE CASTING.

6.6.2 MACHINED CASTINGS

BREAKOUTS IN GATING OR VENTING AREAS

VOID IS ACCEPTABLE AS LONG AS IT DOES NOT COMPROMISE THE FUNCTION AND INTEGRITY OF THE FEATURE AND IS CONTAINED WITHIN THE FEATURE SPECIFICATION MINIMUM DIMENSION.

EXCESS MATERIAL MAY NOT PROJECT BEYOND THE FEATURE SPECIFICATION MAXIMUM DIMENSION.

SUB-FLUSH EJECTOR PIN MARKS

VOID IS ACCEPTABLE AS LONG AS IT DOES NOT COMPROMISE THE FUNCTION AND INTEGRITY OF THE FEATURE AND IS CONTAINED WITHIN THE FEATURE SPECIFICATION MINIMUM DIMENSION.

PARTING LINES

PARTING LINES SHOULD NOT EXCEED THE FEATURE SPECIFICATION MAXIMUM/MINIMUM DIMENSION.

BLISTERS/PIMPLES

SURFACE AREAS THAT ARE RAISED OR SUNKEN AREAS ARE NOT ALLOWED.

KNIT LINES

SHOULD NOT PRODUCE MATERIAL THAT IS DIMENSIONALLY DIFFERENT FROM ONE SIDE OF THE KNIT LINE TO THE OTHER, AND SHOULD NOT PRODUCE A VOID THAT IS MEASURABLE WHERE THE KNIT LINES SHOULD MEET.CONTAMINATION

ANY FOREIGN MATERIAL DETECTABLE UNDER UN-MAGNIFIED CONDITIONS IN ANY SURFACE OF THE PART IS NOT ACCEPTABLE.

CRACKS

CRACKS SHOULD NOT BE VISIBLE ON THE SURFACE

TOOL WITNESS MARKS

TOOL WITNESS MARKS SHOULD NOT BE VISIBLE ON THE SURFACE

FLASH

FLASHING THAT IS LOOSE, SHARP, OR THAT COULD BE SUBSEQUENTLY BROKEN OFF IS NOT ACCEPTABLE. FIRMLY ATTACHED FLASHING SHOULD NOT EXCEED FEATURE SPECIFICATION MAXIMUM DIMENSION.

INDIVIDUAL VOID/PIT/HOLE

INDIVIDUALLY, ACCEPTABLE AS LONG AS IT DOES NOT COMPROMISE THE FUNCTION AND INTEGRITY OF THE FEATURE, IS NO MORE THAN .030" IN DEPTH FROM SURFACE, AND IS LESS THAN .025" IN AT ITS WIDEST PART AND DOES NOT VIOLATE THE CONNECTED (CHAINED) POROSITY MAXIMUM LENGTH RULE BELOW. SO LONG AS THESE VOIDS ARE REASONABLY DISTRIBUTED AND NOT CONCENTRATED IN ONE AREA, THIS IS CONSIDERED "SALT AND PEPPER" POROSITY AND IS CONSIDERED ACCEPTABLE.

INDIVIDUALLY, ACCEPTABLE AS LONG AS IT DOES NOT COMPROMISE THE FUNCTION AND INTEGRITY OF THE FEATURE, IS NO MORE THAN .030" IN DEPTH FROM THE SURFACE, AND IS BETWEEN .025" AND .055" AT ITS WIDEST PART AND DOES NOT VIOLATE THE CONNECTED (CHAINED) POROSITY MAXIMUM LENGTH RULE BELOW. MULTIPLE VOIDS/PITS/HOLES IN THIS CATEGORY OF SIZE WILL NEED TO PASS THE ADDITIONAL TESTS OF GROUPED POROSITY BELOW. INDIVIDUAL VOIDS MEASURING LARGER THAN .55" ARE NOT PERMISSIBLE ON THE EXPOSED CASTING SURFACES.

AN EXCEPTION TO THE ABOVE REQUIREMENTS ON INDIVIDUAL HOLES IS FOR THREADED FEATURES. WHEN THREE ADJACENT THREADS OF A THREADED FEATURE HAVE VOIDS PRESENT, THEN THIS IS NOT AN ACCEPTABLE CONDITION UNLESS THE VOIDS ARE TRULY OF "SALT AND PEPPER" VARIETY.

GROUPED POROSITY REQUIREMENTS BY SIZE CONCENTRATION, AND DISTANCES APART:

BETWEEN .025" AND .055" ACROSS WIDEST WIDTH:

EXPOSED CONNECTED (CHAINED) POROSITY OF VOIDS OF THIS SIZE, OR A SINGLE, OBVIOUSLY LINEAR VOID WITH WIDEST WIDTH IN THIS SIZE CAN EACH BE COUNTED AS AN ACCEPTABLE SINGLE INDIVIDUAL VOID SO LONG AS THE TOTAL MEASUREMENT ACROSS ALL THE VOIDED MATERIAL DOES NOT EXCEED .125" IN LENGTH.

EXCESSIVE CONCENTRATION OF VOIDS OF THIS SIZE IS DEFINED AS 4 OR MORE INDIVIDUAL VOIDS WITHIN AN AREA .375" BY .375" SQUARE OR MORE THAN 6 TOTAL INDIVIDUAL VOIDS OF THIS SIZE PER SQUARE INCH OF CUSTOMER VIEWABLE SURFACE AREA.

DISTANCE BETWEEN EDGES OF INDIVIDUAL ADJACENT VOIDS OF THIS SIZE MUST BE AT LEAST .125" APART ON ANY GIVEN SURFACE.

Casting Defects

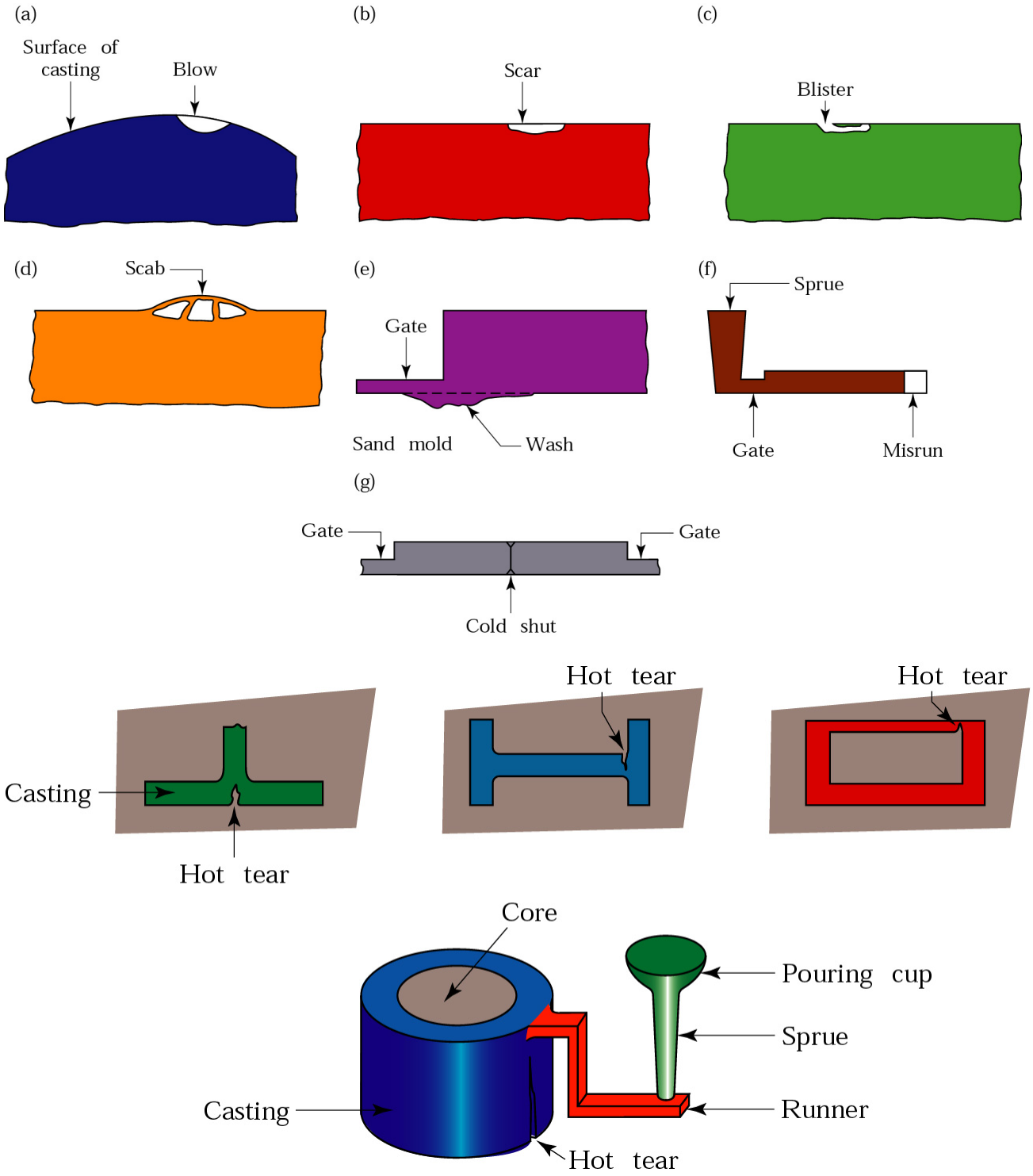

Porosity Radiographs

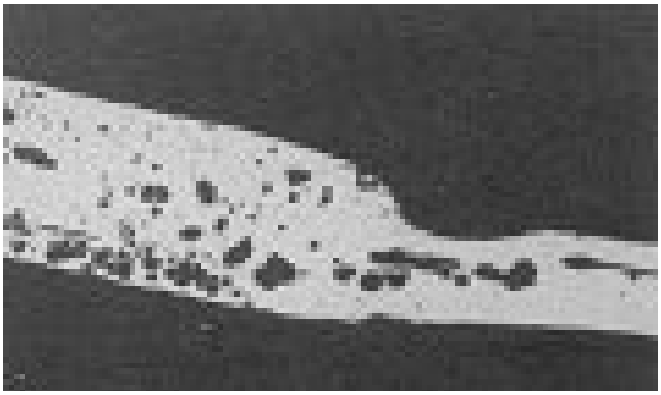

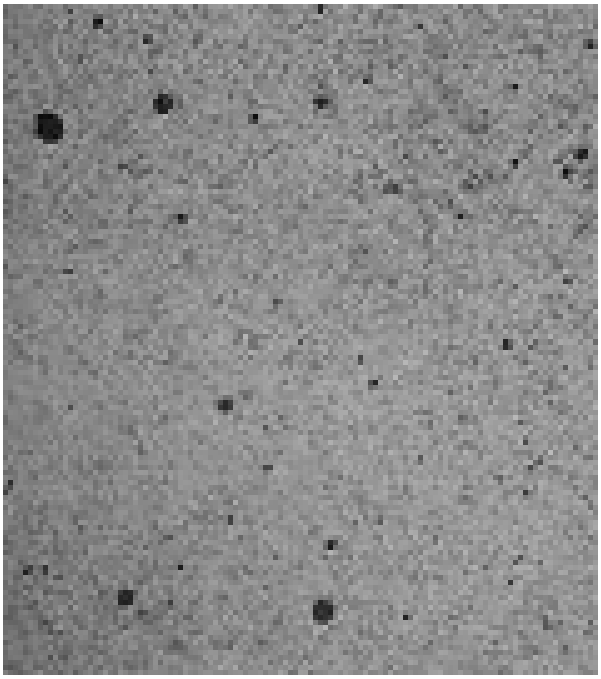

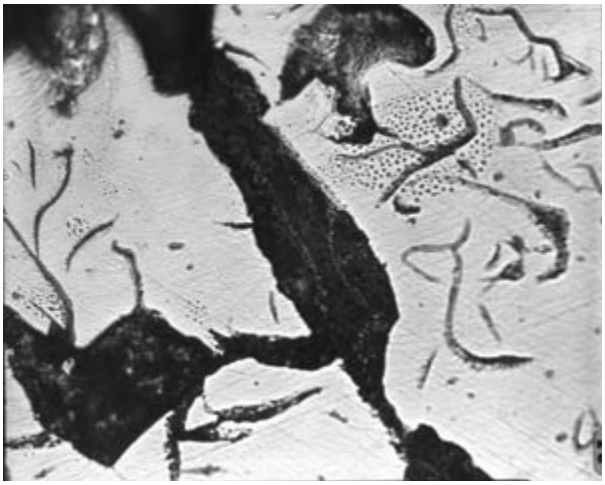

7.0 THREADED PARTS

7.1 GENERAL

7.1.1 THREAD FORM

ALL THREADS SHALL CONFORM TO THE THREAD FORM SHOWN IN FED-STD-H28, SCREW THREAD STANDARDS FOR FEDERAL SERVICES, OBTAINABLE FROM: GENERAL SERVICES ADMINISTRATION, SPECIFICATION AND CONSUMER INFORMATION BRANCH, BLDG. 197, WASHINGTON NAVY YARD, WASHINGTON, DC 20407; OR IN THE UNIFIED AMERICAN SCREW THREAD STANDARD ANSI B1.1, 1989, OBTAINABLE FROM THE AMERICAN SOCIETY OF MECHANICAL ENGINEERS., 345 EAST 47TH ST., NEW YORK, NEW YORK 10017.

7.1.2 THREADING TO SHOULDER

THE FIRST 3 1/2 THREADS NEXT TO THE SHOULDER MAY BE INCOMPLETE EXCEPT WHEN AN UNDERCUT IS SPECIFIED. THE DIAMETER OF THE UNDERCUT SHALL BE WITHIN THE MAXIMUM AND MINIMUM LIMITS OF THE MINOR DIAMETER OF THE SCREW AS SPECIFIED IN FED-STD-H28. THE WIDTH OF THE UNDERCUT SHALL BE APPROXIMATELY 3 1/2 TIMES THE PITCH OF THE THREADS.

7.1.3 LENGTH

DIMENSIONS OF THREADED LENGTHS OR DEPTH SHOWN ON DRAWINGS APPLY TO COMPLETE THREADS. THREADS BEYOND THE LENGTH OR DEPTH SPECIFIED MAY BE INCOMPLETE. SEE FIGURE 9.

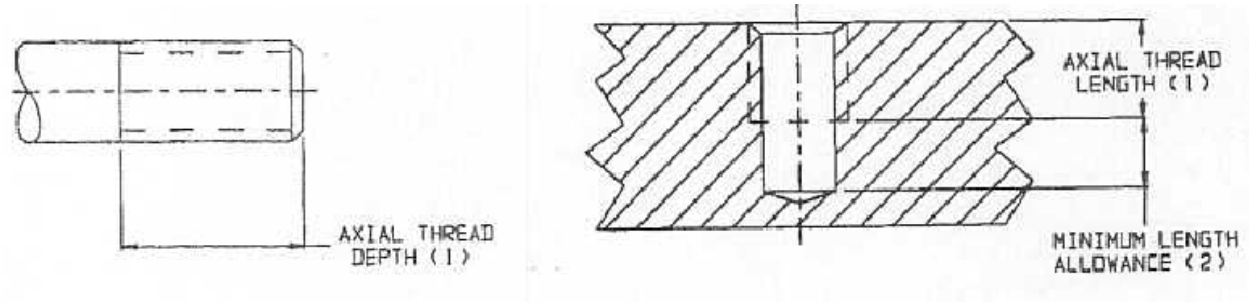

FIGURE 9

EXTERNAL THREAD | BLIND HOLE

1. DIMENSION OF AXIAL THREAD DEPTH OR LENGTH SHOWN ON DRAWING INDICATED MINIMUM LENGTH OF COMPLETE THREADS.

2. MINIMUM LENGTH ALLOWANCE SHALL BE SIX TIMES THE THREAD PITCH FOR STANDARD TAPS FOR MACHINE AND FRACTIONAL SCREW SIZES, AND 4 TIMES THE THREAD PITCH FOR ALL SIZES OF BOTTOM TAPS.

7.1.4 APPEARANCE

ALL THREADS MUST BE FREE FROM BURRS, NICKS, AND ROUGH OR CHATTERED SURFACES.

7.1.5 GAGING

7.1.5.1 "GO" GAGES

TO BE ACCEPTABLE, THE PRODUCT SHALL ALLOW A PROPER "GO" GAGE TO ENTER, OR TO BE ENTERED IN, THE FULL LENGTH OF DEPTH OF THE THREAD.

7.1.5.2 NO GO" GAGES

THREADS ARE ACCEPTABLE AS WITHIN MATERIAL LIMITS IF, WHEN PLUG AND RING THREADS GAGES ARE USED. THE "NO GO" PLUG GAGE DOES NOT ENTER OR THE "NO GO" RING GAGE IS NOT ENTERED. THREADS MAY BE ACCEPTABLE IF ALL COMPLETE THREADS CAN ENTER IN, OR BE ENTERED BY THE "NO GO" GAGE, PROVIDED A DEFINITE DRAG RESULTS FROM METAL-TO-METAL CONTACT ON OR BEFORE THE THIRD TURN OF ENTRY. "NO GO" GAGES SHOULD NOT BE FORCED AFTER THE DRAG IS DEFINITE. THE REQUIREMENTS OF EXTREME APPLICATIONS SUCH AS EXCEPTIONALLY THIN OR DUCTILE MATERIAL, SMALL NUMBER OF THREADS, ETC., MAY NECESSITATE MODIFICATION OF THIS PRACTICE, AND IN SUCH CASES THE "NO GO" GAGING PRACTICE SHALL BE AS SPECIFIED BY THE PROCURING AGENCY.

7.1.5.3 THREE-ROLL INDICATING-TYPE GAGE READINGS

WHEN THIS TYPE GAGE IS USED ON CLASS 2, 2A, 3, OR 3A EXTERNAL THREADS, THE GAGE READING MAY EXCEED THE BASIC PITCH DIAMETER NOT MORE THAN 1/8 TURN OF THE SCREW, PROVIDING THE MAXIMUM GAGE READING DOES NOT EXCEED THE BASIC PITCH DIAMETER BY MORE THAN 50 PERCENT OF THE DIFFERENCE BETWEEN BASIC PITCH DIAMETER AND MINIMUM 2A OR 3A PITCH DIAMETER, AS APPLICABLE. (SEE 7.2.2).

7.2 EXTERNAL THREADS

7.2.1 CLASS OF THREADS

ALL EXTERNAL THREADS ON PARTS SHALL BE CLASS 2A UNLESS OTHERWISE SPECIFIED.

7.2.2 PLATING ALLOWANCE AND GAGING

WHEN THREADED PARTS ARE PLATED, AN ALLOWANCE WILL BE MADE IN THE THREAD DIMENSIONS SO THE PARTS WILL MEET THE REQUIRED LIMITS AND CONFORM TO THE GAGE REQUIREMENTS OF FED-STD-H28 AFTER PLATING. ON CLASS 2A THREADS, FED-STD-H28 PERMITS THE "ALLOWANCE" TO BE USED FOR PLATING AND THUS THEY APPROACH CLASS 3A THREADS IN SIZE. THEREFORE, THESE THREADS SHOULD BE CHECKED WITH CLASS 2A "GO AND "NOT GO" GAGES PRIOR TO THE APPLICATION OF AN ADDITIVE FINISH TO ENSURE THAT, AFTER PLATING, THEY WILL BE ACCEPTABLE BY CLASS 3A "GO" GAGES.

7.2.3 CHAMFER

THE LEADING ENDS OF EXTERNALLY THREADED PARTS SHALL HAVE A 45° BY ONE THREAD LENGTH CHAMFER AFTER THREADING TO RELIEVE THE FIRST THREAD. (SEE FIGURE 10) THIS SPECIFICATION DOES NOT APPLY TO COMMERCIAL STOCK ITEMS.

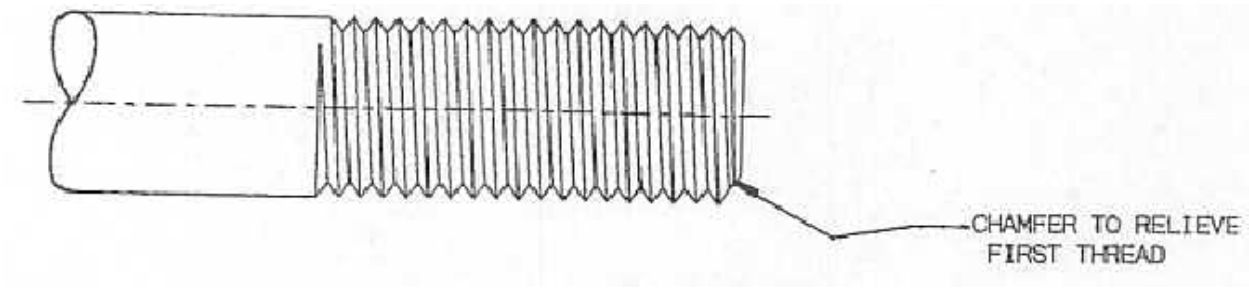

FIGURE 10

7.3 INTERNAL THREADS

7.3.1 CLASS OF THREADS

ALL INTERNAL THREADS SHALL BE CLASS 2B UNLESS OTHERWISE SPECIFIED.

7.3.2 CHAMFER

THE LEADING ENDS OF INTERNALLY THREADED PARTS SHALL HAVE SUFFICIENT CHAMFER AFTER THREADING TO RELIEVE THE FIRST THREAD. SEE PARAGRAPH 5.1.2.

7.4 TAP HOLE DIAMETERS

(BEFORE TAPPING) - SEE PARAGRAPH 5.2.5.

8.0 PLATING AND FINISHING REQUIREMENTS

8.1 THICKNESS OF PLATING

UNLESS OTHERWISE SPECIFIED, PLATING THICKNESS SHALL BE .0002 INCHES MINIMUM FOR CADMIUM, COPPER AND ZINC. OTHER MINIMUM PLATING THICKNESSES ARE: CHROMIUM, .00001 INCHES; NICKEL, .0001 INCHES; GOLD, .000005 INCHES; SILVER, .0003 INCHES. THE RIGHT IS RESERVED TO REQUEST THAT PLATED PARTS BE ACCOMPANIED BY A LABORATORY REPORT SHOWING THICKNESS OF PLATING. THE THICKNESS DATA SHALL SHOW INDIVIDUAL READINGS WHERE MAGNE-GAGE OR MICROSPECTION METHODS ARE USED AND AVERAGE THICKNESS WHERE WEIGHT OF DEPOSIT METHODS ARE USED.

8.2 HYDROGEN EMBRITTLEMENT

IMMEDIATELY AFTER PLATING, REMOVE HYDROGEN EMBRITTLEMENT FROM SPRING-TEMPERED OR HEAT-TREATED METALS (SPRINGS, LOCK WASHERS, HIGH TENSILE STRENGTH SCREWS, ETC.) BY HEAT TREATMENT IN ACCORDANCE WITH THE APPLICABLE PLATING SPECIFICATION.

8.3 FINISH CERTIFICATION

WHEN REQUESTED, ALL PAINTED PARTS SHALL BE ACCOMPANIED BY A STATEMENT SHOWING SURFACE PREPARATION, PRIMER USED (IF SPECIFIED), AND THE NUMBER OF COATS OF ENAMEL OR LACQUER. THE COLORS SPECIFIED MUST MATCH THE COLORS IN FEDERAL STANDARD 595, OBTAINABLE FROM THE BUSINESS SERVICE CENTER, GENERAL SERVICE ADMINISTRATION, REGIONAL OFFICE BUILDING, 7TH AND D STREETS, S.W., WASHINGTON 25, DC.

8.4 MEASUREMENT OF DIMENSIONS INVOLVING ADDITIVE FINISHES

SEE PARAGRAPH 5.16

8.5 DAMAGE TO PAINTED SURFACES

RETOUCH EXPOSED METAL SURFACES WITH THE SPECIFIED FINISH IF PAINT COATING ARE DAMAGED DURING INSPECTION OR HANDLING.

8.6 PASSIVATION

PASSIVATE PER 48S100 UNLESS OTHERWISE NOTED.

9.0 ASSEMBLY REQUIREMENTS

9.1 SOLDERING

SOFT SOLDER PROCEDURE 48S143 APPLIES.

9.2 BURRED SCREWS

SCREW HEADS DAMAGED IN ASSEMBLY ARE NOT ACCEPTABLE.

9.3 STRIPPING OF STRANDED WIRE

DAMAGE DUE TO CONDUCTOR DURING THE STRIPPING OPERATION SHALL BE HELD TO A MINIMUM. THE MAXIMUM PERMISSIBLE NUMBER OF NICKED, CUT, OR BROKEN STRANDS IN STANDARD CONDUCTORS SHALL BE AS LISTED BELOW.

DAMAGED STRANDS

TOTAL NUMBER OF STRANDS IN CONDUCTOR	ACCEPTABLE LEVELS OF DAMAGED STRANDS
0 - 6	0
7 - 16	1
17 26	2
27 36	3
37 46	4
MORE THAN 46	10% OF TOTAL

9.4 TINNING LEADS –

AFTER STRIPPING THE INSULATION FORM THE CONDUCTORS, STRANDED CONDUCTORS SHALL BE TINNED, FOR A MINIMUM LENGTH, TO PREVENT THEM FROM FRAYING.

9.5 GLYPTAL

WHEN GLYPTAL IS USED AS A SCREW BINDER, ALL EXCESS MUST BE REMOVED FROM THE SCREW AREA AS WELL AS FROM THE ASSEMBLY PROPER.

9.6.1 EXPOSED LEAD LENGTH

UNLESS OTHERWISE SPECIFIED, ALL EXPOSED LEAD LENGTHS SHALL BE INTERPRETED AS SHOWN IN FIGURE 11.

9.6.2 LEAD LENGTH FRACTIONAL TOLERANCE (REF. 41D575)

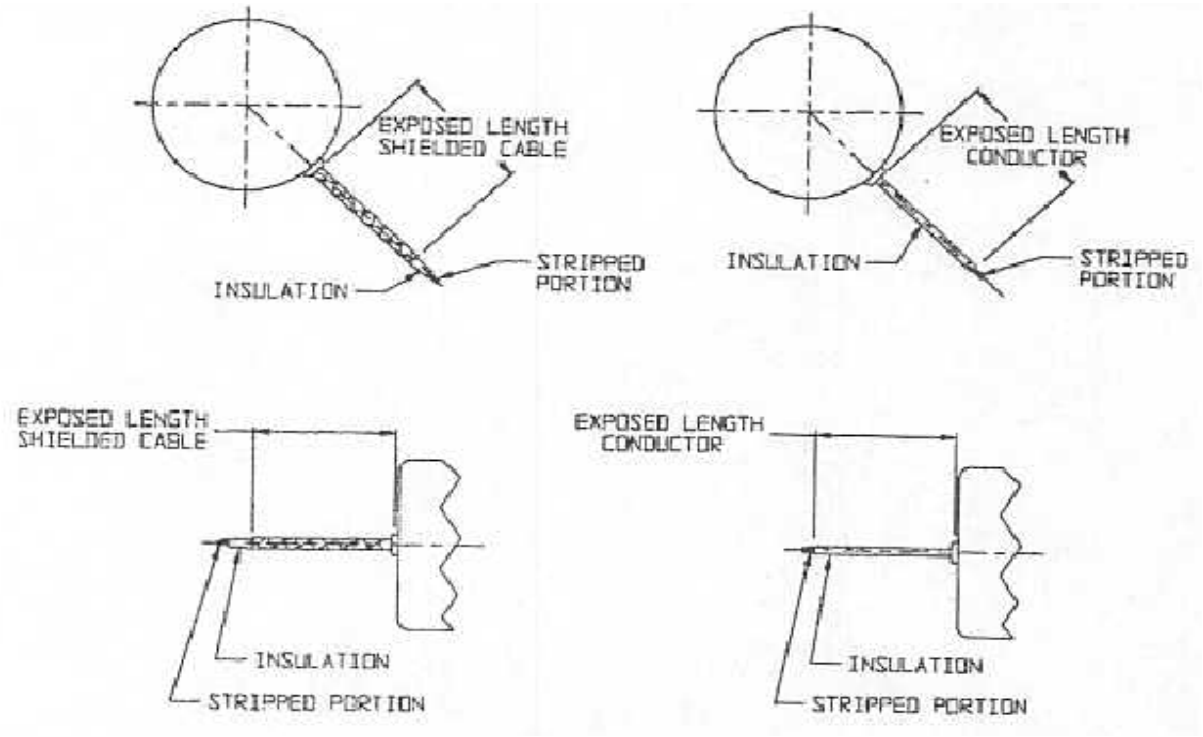

FIGURE 11

9.7 PICTORIAL NETWORKS

UNLESS OTHERWISE SPECIFIED, VIEWS ON DRAWINGS SHOWING ELECTRICAL COMPONENT ARRANGEMENT (ON SUCH THINGS AS TERMINAL BOARD, END BELLS, ETC.) ARE MEANT TO BE DESCRIPTIVE AND NOT RESTRICTIVE.

9.8 RETAINING RINGS, ASSEMBLY OF

DUE TO THE MANUFACTURING METHODS USED, ALL SNAP RINGS, GRIP RINGS, AND OTHER RETAINING RINGS HAVE ONE SURFACE WHICH IS FLAT AND ONE SURFACE WHICH IS RADIUSED WITH THE DIE ROLL. THE FLAT SIDE WILL BE ASSEMBLED TO RESIST THE ASSEMBLED APPLIED THRUST.

9.9 UNIT IDENTIFICATION

9.9.1 NAMEPLATES

UNLESS OTHERWISE SPECIFIED, NAMEPLATES SHALL BE PLACED ON THE UNIT WITH THE BOTTOM EDGE TOWARD THE SHAFT END.

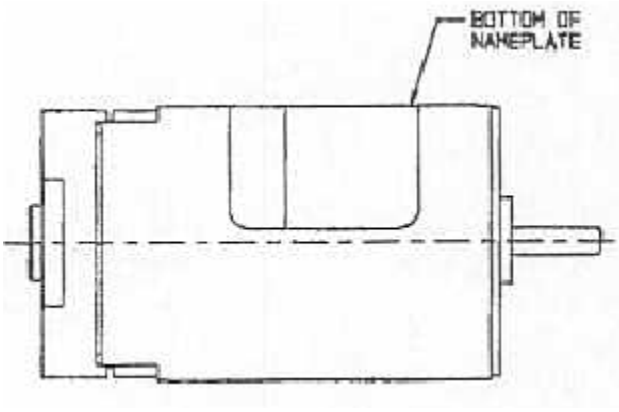

9.10 SHAFT END PLAY REQUIREMENTS

UNLESS OTHERWISE SPECIFIED, THE FOLLOWING ENDPLAY GAGING FORCES SHALL APPLY:

SS MOTOR - SPRING SHIMMED ---------- 5# FORCE
SS MOTOR - SOLID SHIMMED ---------- 5# REVERSING FORCE
DC MOTOR - SPRING SHIMMED ---------- 12# TO 14# FORCE
DC MOTOR - SOLID SHIMMED ---------- 5# REVERSING FORCE
AC MOTOR - SPRING SHIMMED ---------- 5# FORCE
AC MOTOR - SOLID SHIMMED ---------- 5# REVERSING FORCE
AC MOTOR - SOLID SHIMMED UNITS USING THE
35D592 STATOR RETAINER AND THE
35D647 RETAINING RING ---------- 3 # REVERSING FORCE

PLANETARY OUTPUT SHAFTS - SOLID SHIMMED ----REVERSING HAND PRESSURE

9.10.1 DIELECTRIC REQUIREMENTS

DO NOT PERFORM DIELECTRIC TEST ON UNITS WHICH ARE GROUNDED OR HAVE INTERNAL CAPACITORS. THE FOLLOWING TEST CAN BE PERFORMED ON ALL UNITS IN WORK PROCESS PRIOR TO GROUNDING. UNLESS OTHERWISE SPECIFIED ON DRAWINGS, THE FOLLOWING DIELECTRIC REQUIREMENTS APPLY:

DC MOTOR, PERMANENT MAGNET----------500 VAC, 60 HZ., (1) SECOND

DC MOTOR, WOUND FIELD----------500 VAC, 60 HZ., (1) SECOND
EACH FIELD COIL TO GROUND.

AC MOTOR----------500 VAC, 60 HZ., (1) SECOND
EACH PHASE TO GROUND.

9.11 PART SUBSTITUTION

THE FOLLOWING CHART SHOWS AUTHORIZED PART SUBSTITUTIONS (ALTERNATES) FOR ITEMS SPECIFIED ON DRAWINGS:

SPECIFIED	ON DRAWINGS	AUTHORIZED	SUBSTITUTION
PART NO.	NAME	PART NO.	NAME
1-S-68	SCREW	9A737	SCREW -LOCK-WASHER ASSEMBLY
AN936A4	LOCKWASHER		

9.11.1 PACKAGING SPECIFICATION

THE PACKAGING SPECIFICATIONS CALLED OUT ON GLOBE MOTORS DRAWINGS ARE MINIMUM REQUIREMENTS FOR SAFE COMMERCIAL SHIPPING. IT IS AUTHORIZED TO SUBSTITUTE PACKAGING SPECIFICATIONS THAT ARE SPECIFICALLY CALLED OUT IN THE CUSTOMERS PURCHASE ORDER, CONTRACT, DRAWINGS OR SPECIFICATIONS.

9.11.2 ALNICO MAGNET SUBSTITUTION

IN THE CASE OF MM/LL/BD/BL ALNICO MAGNET MOTORS, IT IS PERMISSIBLE TO USE EITHER THE STRAIGHT ORIENTED (ORANGE DOT) OR CURVE ORIENTATED (GREEN DOT) MAGNETS TO OBTAIN THE DESIRED MOTOR PERFORMANCE SPECIFIED ON THE OUTLINE PRINT.

9.12 BRUSH SHUNT ASSEMBLY REQUIREMENTS

SS MOTOR

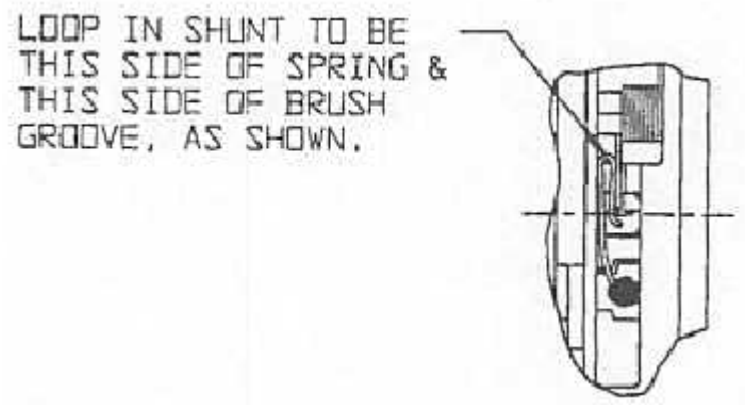

MM MOTOR

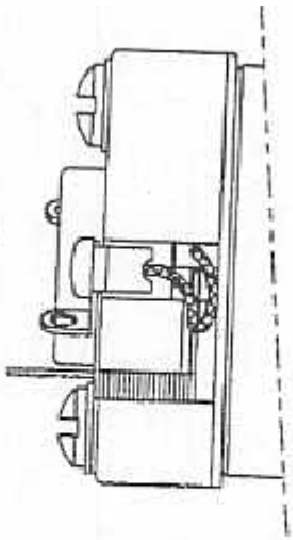

BRUSH INSTALLATION

MOTOR BRUSH CHAMFER TO FACE AWAY FROM SPRING. ROUTE BRUSH SHUNT AS SHOWN.

BD AND GRP MOTORS

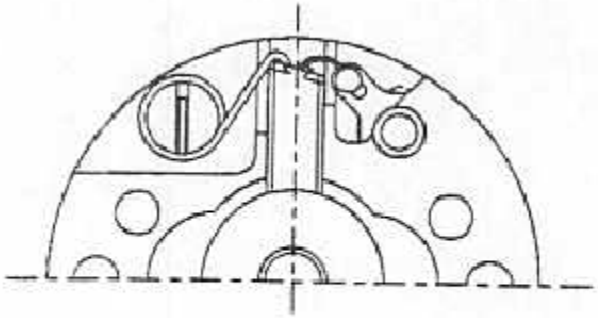

BRUSH & SPRING ORIENTATION VIEW

10.0 STANDARD PROCEDURE SPECIFICATIONS

THE FOLLOWING IS A LISTING OF STANDARD PROCEDURE SPECIFICATIONS.

10.1 BONDING

SPEC NO.	SUBJECT
48S119	ARMSTRONG ADHESIVE – PROCEDURE
48S130	LOCTITE – PROCEDURE
48S133	EASTMAN 910 – PROCEDURE
48S144	ECCOBOND PASTE 88 – PROCEDURE
48S145	ECCOBOND 45 – PROCEDURE
48S169	GLYPTAL – PROCEDURE
48S227	3M EC-826 – PROCEDURE
48S244	LOCTITE SPEED BONDER – APPLICATION PROCEDURE
48S321	RETAINING COMPOUNDS – APPLICATION SPECIFICATION
48S335	EPOXY RESIN ADHESIVE – APPLICATION PROCEDURE
48S338	STRUCTURAL ADHESIVE – APPLICATION PROCEDURE
48S347	CONDUCTIVE EPOXY ADHESIVE – APPLICATION SPECIFICATION
48S372	LOCTITE BEARINGS TO SHAFTS – APPLICATION PROCEDURE
48S227	HIGH STRENGTH GENERAL ADHESIVE – APPLICATION PROCEDURE
48S474	RTV – BONDING SPECIFICATION

10.2 GENERAL

SPEC NO.	SUBJECT
48S156	ETCHING PROCEDURE – TEFLON INSULATED WIRE
48S197	SAFETY WIRE PROCEDURE – SPECIAL –CHANDLER EVANS SPEC PS-M-429
48S232	TEMPERATURE STABILIZATION PROCEDURE – GOVERNORS
53S100	SHOP STANDARDS
48S480	TIME/TEMPERATURE TOLERANCE
48S502	SS MOTOR MAGNETIZING PROCEDURE
48S360	TERMINAL CRIMP SPECIFICATION
48S380	MAGNET EVALUATION & TEST PROCEDURE
48S434	CRIMP SPECIFICATION
48S500	ELECTRO STATIC COATING
48S519	ELECTRO STATIC COATING
48S530	SHAFT SEALS – APPLICATION PROCEDURE
48S581	OPTICAL ENCODERS – ASSEMBLY & TEST PROCEDURE
48S592	ELECTROSTATIC DISCHARGE CONTROL PROGRAM
48S6001	IM13 & IM15 – MAGNETIZING PROCEDURE
41D575	LEAD LENGTH TOLERANCE

10.3 HEAT TREAT

SPEC NO.	SUBJECT
27S235	CARBURIZE & HARDEN PROCEDURE - 20º SPUR GEAR/PINION ASSY.
27S313	NITRIDE PROCEDURE - 20º SPUR GEAR BOX OUTPUT SHAFT
27S364	HEAT TREAT – 17/18% COBALT STEEL – AC HYSTERISIS ROTOR MAGNETS
27S380	HEAT TREAT – NI SPAN C MATERIAL – GOVERNOR LEAF
48S106	NYDROGEN ANNEAL PROCEDURE –ARMCO INGOT IRON
48S110	HYDROGEN ANNEAL PROCEDURE – SHORT CYCLE – ARMCO INGOT IRON
48S116	HYDROGEN ANNEAL PROCEDURE – 4750 FERRO – NICKEL OR CARPENTER HI PERM 49 STEEL
48S168	HEAT TREAT & ASSY PROCEDURE MM PLANETARY PLATE/SUN GEAR
48S219	ANNEALING PROCEDURE – M-15 ARMCO HOT-ROLLED ELECTRICAL STEEL
48S497	HEAT TREAT & BRAZING SPECIFICATION

10.4 IMPREGNATION

SPEC NO.	SUBJECT
48S122	ECCOSEAL W 19 – PROCEDURE
48S368	VACUUM IMPREGNATING PORUS METAL BEARINGS
48S370	IMPREGNATION SPECIFICATION FOR AC STATORS
48S311	IMPREGNATION PROCEDURE – ARMATURES & DC STATORS
48S312	IMPREGNATION PROCEDURE- ARMATURES & DC STATORS – DOUBLE DIP
48S313	IMPREGNATION PROCEDURE – ARMATURES & DC STATORS –DOUBLE DIP
48S281	ARMATURE IMPREGNATION
48S293	IMPREGNATION SPECIFICATION FOR AC STATORS – HOT DIP
48S392	TRICKLE VARNISH IMPREGNATION – ARMATURE
48S479	IMPREGNATION PROCEDURE – DOUBLE DIP (HOT)

10.5 LUBRICATION

SPEC NO.	SUBJECT
27S219	LUBRICATION PROCEDURE- 20º SPUR GEAR BOX
48S104	LUBRICATION PROCEDURE – PLANETARY GEAR BOX (MM-LL)
48S117	GREASE COATING – PLANETARY AND/OR SPUR GEAR BOX – PROCEDURE
48S131	LUBRICATION PROCEDURE – SS PLANETARY GEAR BOX
48S134	LUBRICATION PROCEDURE – BALL BEARING
48S153	ELECTROFILM PROCEDURE
48S187	LUBRICATION PROCEDURE – 3.5 PLANETARY GEAR BOX
48S238	GREASE PLATE – BALL BEARINGS – PROCEDURE
48S246	OIL MIST SPRAY – BALL BEARINGS – PROCEDURE
48S476	GREASE PLATING BALL SCREWS

10.6 MARKING

SPEC NO.	SUBJECT
48S103	MARKING PROCEDURE – RUBBER STAMP
48S105	MARKING PROCEDURE – SPECIAL FOR 41A180
48S112	EIA DATE CODE PROCEDURE
48S132	MARKING PROCEDURE – MARKEM PROCESS
48S170	MARKING PROCEDURE – ELECTRO-ETCH
48S249	DATE CODE PER MIL-STD-456
48S435	MARKING SPECIFICATION USING EPOXY INK

10.7 PAINT, PRIME, VARNISH

SPEC NO.	SUBJECT
27S373	APPLICATION PROCEDURE – (PALADIN) 27D734
48S120	APPLICATION PROCEDURE – MIL-P-8585, ZINC CHROMATE 45D111 (ALSO SEE 48S158)
48S121	APPLICATION PROCEDURE – TT-E-527 ENAMEL, 45D113
48S123	APPLICATION PROCEDURE – MIL-E-5558, ENAMEL, LIGHT GREY-45D116
48S125	APPLICATION PROCEDURE – MIL-E-5557, ENAMEL, HEAT RESISTANT 45D122
48S129	APPLICATION PROCEDURE – LACQUER, 78 GRAY – 45D121
48S149	APPLICATION PROCEDURE – MIL-E-5556, ENAMEL, CAMPUFLAGE 45D135
48S151	APPLICATION PROCEDURE – MIL-P-15328, PRIMER, PRETREATMENT 45D101
48S155	APPLICATION PROCEDURE –MIL-V-173, VARNISH – 27D943
48S158	APPLICATION PROCEDURE – MIL-P-8585 ZINC CHROMATE FOR LAMINATED IRON ARMATURE STACK
48S205	APPLICATION PROCEDURE – TT-E-529, ENAMEL – 45D151
48S399	POLYURETHANE COATING

10.8 PLATING AND FINISHING

SPEC NO	SUBJECT
48S100	PASSIVATE PROCEDURE
48S161	BRIGHT DIP PROCEDURE – BERYLLIUM COPPER
48S268	NITRIDING 416 STAINLESS PROCEDURE
48S269	TIN PLATE PROCEDURE
48S507	PLATING HANDBOOK
49S100	CADMIUM PLATE PROCEDURE – SPECIAL PURPOSE
48S291	CHROMATE PROCESS FOR ALUMINUM
48S120	ZINC CHROMATE PRIMER
48S509	APPLICATION OF GOLD PLATING

10.9 RESIN COATING AND CASTING

SPEC NO.	SUBJECT
48S181	APPLICATION PROCEDURE – ECCOFOAM FPH – 47D115
48S203	APPLICATION PROCEDURE – HYSOL PATCH KIT – 47D120
48S208	APPLICATION PROCEDURE – EPOXY RESIN FLUIDIZED BED COATING – CORVEL, HYSOL DK4-01 – 27D1006
48S 217	APPLICATION PROCEDURE – CASTING RESIN – STYCAST 2651
48S236	APPLICATION PROCEDURE – CASTING RESIN – STYCAST 2850FT
48S350	APPLICATION PROCEDURE FOR SECURING MAGNETS
48S365	APPLICATION PROCEDURE FOR APPLYING 45D250-1 ENCAPSULANT
48S158	APPLICATION PROCEDURE FOR PROTECTIVE COATING FOR LAM'S
48S536	CONFORMAL COATING PROCEDURE FOR PC BOARDS
48S567	CONFORMAL COATING PROCEDURE FOR PC BOARDS (INDUSTRIAL)
48S6017	SAME AS ABOVE

10.10 SEALANTS

SPEC NO.	SUBJECT
48S157	APPLICATION PROCEDURE – DOW CORNING RTV 731 – SEALANT SILICONE RUBBER – 45D134
48S162	APPLICATION PROCEDURE – STABOND C-875, SEALANT – 45D138
48S169	APPLICATION PROCEDURE – GLYPTAL – 35D595
48S136	SEALING PROCEDURE
48S559	SEALING COMPOUND, CORROSION INHIBITING

10.11 SOLDERING

SPEC NO.	SUBJECT
48S114	SOLDERING PROCEDURE – 22A524 GENERATOR
48S143	SOLDERING PROCEDURE – GLOBE MOTORS STANDARD

10.12 PERFORMANCE

SPEC NO.	SUBJECT
48S582	PERFORMANCE TEST FOR IM-21 MOTORS
48S584	PERFORMANCE TEST FOR IM-13 SPUR GEARMOTORS
48S585	PERFORMANCE TEST FOR IM-15 SPUR GEARMOTORS